Back

FURUNO

OPERATOR'S MANUAL

MARINE VHF RADIOTELEPHONE

MODEL FM-2721

FURUNO ELECTRIC CO., LTD.
NISHINOMIYA, JAPAN

PRINTED IN JAPAN

© FURUNO ELECTRIC CO., LTD.

9-52, Ashihara-cho,
Nishinomiya, Japan

Telephone: 0798-65-2111
Telefax: 0798-65-4200

•Your Local Agent/Dealer

All rights reserved. Printed in Japan

FIRST EDITION : MAR. 2000
D : MAY 12, 2001

PUB. No. OME-56163
FM-2721
(HIMA)

* 00080897300 *

DISTRESS Call Procedure

Do the following when a life endangering situation arises <u>on your vessel:</u>

1. Hook off the handset.
2. Press the [POWER] switch in the hanger to turn on the unit if it is not already on.
3. Open the DISTRESS button lid in the hanger and press the [DISTRESS] button about three seconds to show the following display, then release the button.

```
 Distress call
  in progress
DISTRESS CALL
Nature:
 UNDESIGNATED
Pos:     12:34
12°34E123°45N
```

4. The equipment displays “Wait for Ack Auto re-Xmit” while waiting for acknowledgment of the distress call. (Transmitting repeats with 3.5 to 4.5 minutes interval until pressing [Cancel] key.
5. When you receive the distress acknowledgement call, you are automatically connected to CH16. Hook off the handset if it is not already off hook. Press the PTT switch and say:
   a) MAYDAY three times.
   b) This is [name of your vessel].
   c) MAYDAY
   d) This is [name of your vessel].
   e) Position
   f) Nature of Distress
   g) Kind of assistance needed
   h) Number of crew
   i) Other info such as description of your vessel
   j) Over.

Receiving Distress Alert from Other Ship

General

When the FM-2721 receives a distress alert from other vessel the LED (Red) lights and the FM-2721 sounds the distress alarm.

1. Silence the alarm by pressing the [Cancel] key (or wait for two minutes).
2. Press the [Log] key to show the Sel. Log file menu.
3. Select Rcvd. DISTRESS, and then press the [Enter] key to view the contents of the distress message.
4. Wait up to three minutes until the DIST ACK signal from a coast station is received.
5. Open the Rcvd. DISTRESS file again.
6. Be prepared to follow the instructions of the coast station.

If you do not receive the DIST ACK signal, follow the flow chart shown on the next page.

The DIST ACK by voice can be transmitted by you **under certain conditions.** Please carefully read and follow the flow chart to determine whether you should transmit it or not.

When receiving a distress alert, the LCD display appears as shown right.

```
INTL  SIMP   25W
Rx  16
Lat: 45.23 N
Lon:121.88 E
Time:10:57UTC
VOL:08     SQ:03
RCVD. DISTRESS
```

<Hand set on hook>

```
INTL  SIMP   25W
Rx
SCAN        16
VOL:08     SQ:03
RCVD. DISTRESS
```

<Hand set off hook>

Should I transmit DIST ACK by voice or not?

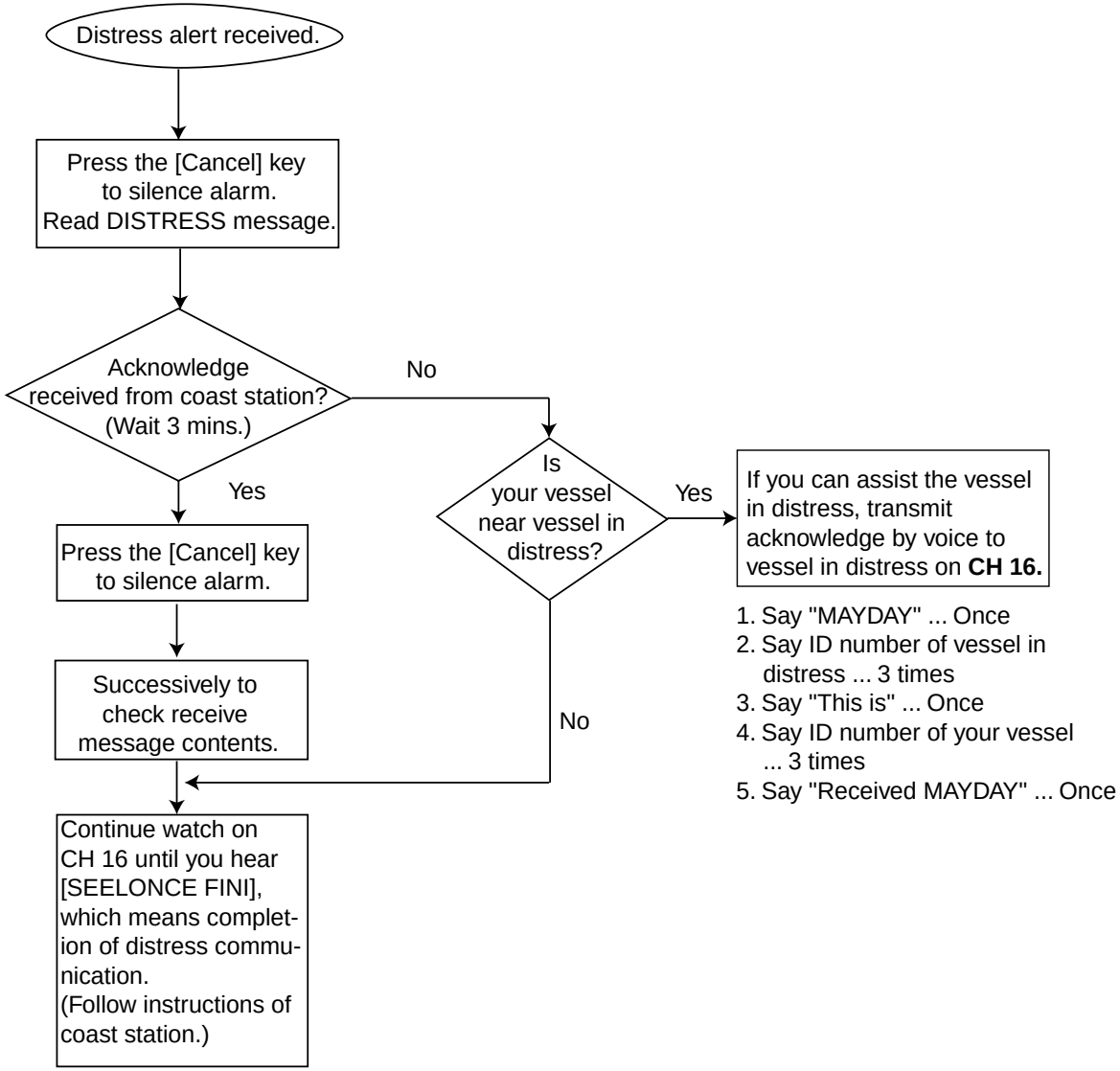

⚠ SAFETY INSTRUCTIONS

For the operator

⚠ CAUTION

Do not open the equipment.

Only qualified personal should work inside the equipment.

Do not disassemble or modify the equipment.

Fire, electrical shock or serious injury can result.

Turn off the power immediately if waterleaks into the equipment or the equip-ment is emmitting smoke or fire.

Continued use of the equipment can cause fire or electrical shock.

Any repair work must be done by a licensed radio technician.

Improper repair work can cause electrical shock or fire.

⚠ CAUTION

Handle the handset carefully.

Rough handling may affect its watertight integrity.

Distances at which radiation levels of 100 and 10 W/m^2 exist are given in the table.

Distance to 100 W/m^2 point	Distance to 10 W/m^2 point
0.12 m	0.39 m

For the installer

⚠ WARNING

ELECTRICAL SHOCK HAZARD
Do not open the equipment unless totally familiar with electrical circuits and service manual.

Only qualified personnel should work inside the equipment.

Turn off the power at the switchboard before beginning the installation.

Fire or electrical shock can result if the power is left on.

Do not install the equipment where it may get wet from rain or water splash.

Water in the equipment can result in fire, electrical shock or equipment damage.

⚠ WARNING

Be sure that the power supply is compatible with the voltage rating of the equipment.

Connection of an incorrect power supply can cause fire or equipment damage. The voltage rating of the equipment appears on the label above the power connector.

⚠ CAUTION

Ground the equipment to prevent electrical shock and mutual interference.

Observe the following compass safe distances to prevent interference to a magnetic compass:

	Standard compass	Steering compass
Transceiver unit	0.95 m	0.65 m
Handset and bracket	2.05 m	1.40 m
Loundspeaker	2.5 m	1.7 m

Table of Contents

DISTRESS Call Procedure..... i

Receiving Distress Alert from Other Ship..... ii

SAFETY INSTRUCTIONS..... iv

System Configuration viii

Equipment Lists..... ix

Introduction..... xi

1. Installation..... 1

1.1 Mounting 1
1.2 Transceiver Connections..... 5
1.3 Handset Connection..... 9

2. Controls 10

2.1 Controls, Indications, LEDs 10

3. VHF Telephone Operation 14

3.1 Turning the Power On/Off..... 14
3.2 Listening for Telephony Calls 14
3.3 Adjusting the Dimmer, Contrast..... 14
3.4 Selecting USA, INT, WX Channel..... 15
3.5 Selecting Channel 15
3.6 Adjusting Squelch..... 15
3.7 Adjusting Loudspeaker Volume 16
3.8 Muting the Loudspeaker 16
3.9 Setting Transmitter Power 16
3.10 Receiving a Telephone Call 16
3.11 Making a Telephone Call..... 17
3.12 Dual Watch 17
3.13 Starting/Stopping Scanning 17
3.14 Intercom 18
3.15 Keyboard Lock 18

4. DSC Operation 19

4.1 Distress Call 19
4.2 Distress Call by [Call] key..... 20
4.3 Sending DSC Call to a Ship 21
4.4 Sending DSC Call to a Coast Station 22
4.5 Sending PSTN Call to a Shore Station..... 23
4.6 Sending a Group DSC Call..... 25
4.7 Sending an All Ships Call 26
4.8 Receiving DSC Calls 27

4.9 Manual Entry of Position and Time..... 28
4.10 Storing IDs 29
4.11 Storing Telephone Numbers 30
4.12 Storing Messages 31
4.13 Message Log..... 33

5. Maintenance 35

5.1 Antenna Check..... 35
5.2 Cleaning of Transceiver, Handset 35
5.3 Fuse Replacement 35
5.4 Battery Check..... 35

6. Troubleshooting 36

6.1 Easy Troubleshooting..... 36
6.2 Diagnostics..... 38
6.3 Self check Messages 39
6.4 Menu Tree 40

Appendix 41

How to fabricate the cable for optional connector 17JE-23250-02/17JE-23090-02 41
VHF Channel Frequencies (Marine and Inland waterways)..... 42
VHF Weather Channel Frequencies 46
PRIVATE CHANNELS (U.K. MARINERS)..... 47
PRIVATE CHANNELS (NORDIC)..... 47
PRIVATE CHANNELS (NETHERLANDS-INLAND). 47

General Notes on Operating Marine VHF.....48

Rules and Manners 48
Communication Distance..... 49

Specifications SP-1

Packing Lists A-1

Outline Drawings.....D-1

Schematic Diagram S-1

Declaration of Conformity

System Configuration

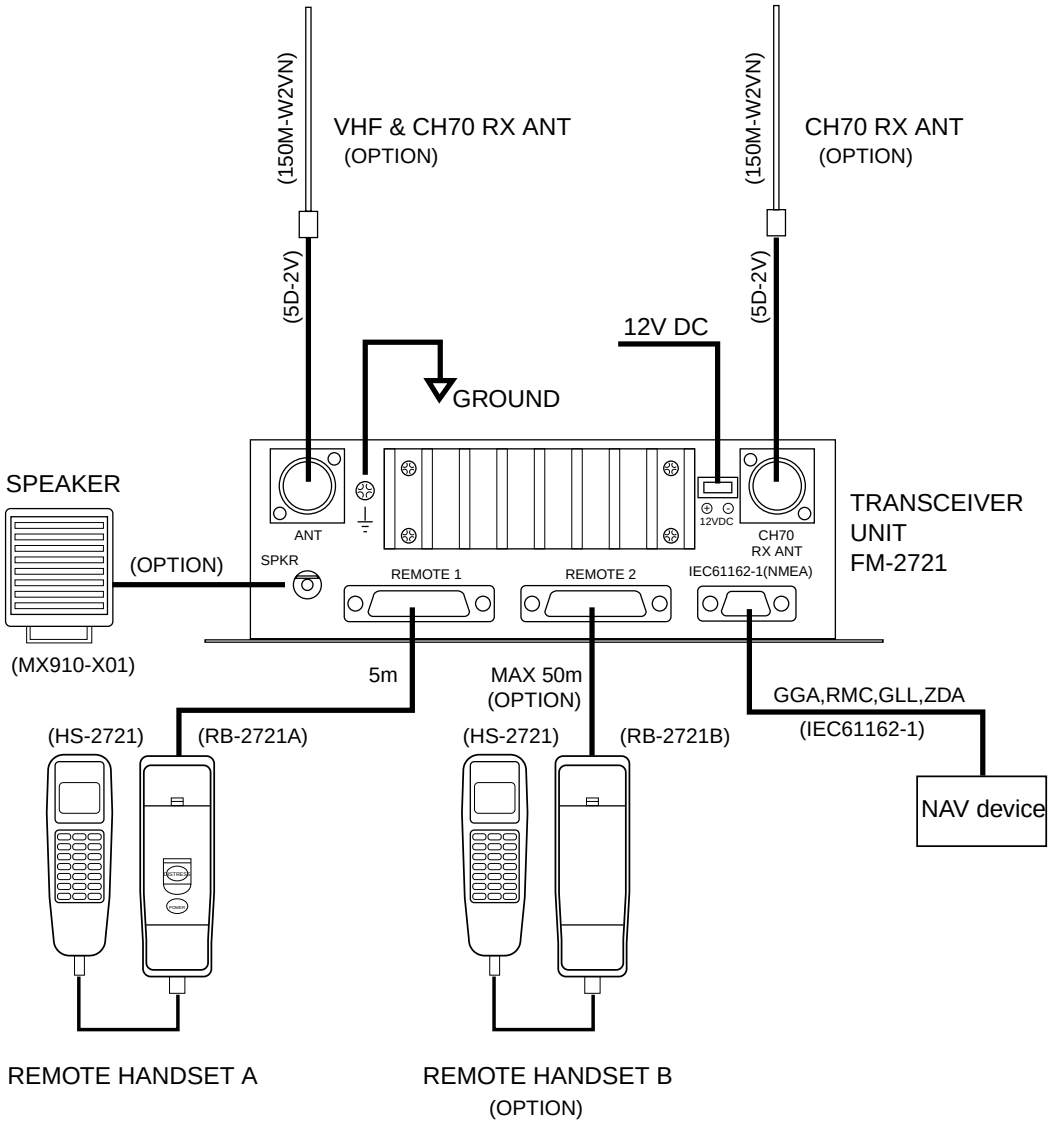

Equipment Lists

Standard Supply

Name	Type	Code No.	Qty	Remarks
Handset	HS-2721	-	1	
Transceiver Unit	FM-2721	-	1	
Bracket	RB-2721A	-	1	For handset
Installation Materials	CP05-08000	000-057-744	1 set	
Spare Parts	SP05-01600	004-542-060	1 set	10A Fuse: 2 pcs

Optional Supply (cont.)

Name	Type	Code No.	Qty	Remarks
Bracket	RB-2721B	000-057-738	1 set	
	RB-2721A	000-057-737	1 set	
Handset	HS-2721	000-057-736	1 set	
Antenna Kit	AP05-00810	000-057-722	1 set	
Antenna Kit	AP05-00820	000-057-723	1 set	
Antenna Kit	AP05-00900	000-057-739	1 set	
Loudspeaker	MX910-X01	000-138-001	1	
Twisted 10 pair Cable	05S0308 *5 M*	000-107-578	1	5 m
	05S0308 *10 M*	000-106-038		10 m
	05S0308 *20 M*	000-106-039		20 m
	05S0308 *30 M*	000-106-040		30 m
	05S0308 *40 M*	000-106-041		40 m
	05S0308 *50 M*	000-106-042		50 m
Connector	17JE-23250-02 (D8C)	000-120-946	1	For 05S0308 (REMOTE2)
Connector	17JE-23090-02 (D8C)	000-132-624	1	For IEC61162-1 (NMEA)
DC-DC Converter	PC-208A	000-142-469	1	
CH-70 Antenna Kit	OP05-92	005-376-120	1 set	Connector assy.

Introduction

A Word to the Owner of the FM-2721

Congratulations on your choice of the FURUNO FM-2721 Marine VHF Radiotelephone. We are confident that you will enjoy many years of trouble-free operation with this fine piece of equipment.

For more than 50 years FURUNO Electric Company has enjoyed an enviable reputation for quality and reliability throughout the world. This dedication is furthered by our extensive global network of agents and dealers.

Your equipment is designed and constructed to provide commercial grade performance and reliability, yet is affordable for pleasure craft owners.

Please carefully read this manual and follow the recommended procedure for installation, operation and maintenance. With proper care, your equipment should provide years of enjoyable and dependable communications.

Thank you for considering and purchasing FURUNO.

Features

- 25 W radiotelephone with control in palm
- Intercom facility
- Compact transceiver unit allows installation where space is limited
- ATIS (Automatic Transmitter Identification System) mode enables use of the radiotelephone on inland waterways, also use with the class D DSC (ID registrations required).
- “Dual watch” monitors CH16 while watching on another channel.
- Extensive message storage

- Conforms to the following regulations
- European Standard EN 301 025 (VHF with Class D DSC)
- European Standard EN 300 698 (VHF used on inland waterways)
- ITU Radio Regulations Appendix 18: Table of transmitting frequencies 156 – 174 MHz for stations in the mobile service
- ITU-T Recommendation E.161: Arrangements of digits, letters and symbols on telephones and other devices that can be used for gaining access to a telephone network
- IEC61162-1: Maritime navigation and radiocommunication equipment and Systems – Digital Interface Part 1: Single and multiple listeners
- MSC/Circ.803: Participation of non-SOLAS ships in the Global Maritime Distress and Safety System
- ITU-R Recommendation M.493-9: Digital selective-calling system for use in maritime mobile service

1. Installation

1.1 Mounting

Transceiver unit

The transceiver unit can be mounted on the overhead, a desktop or on a bulkhead. Select the mounting location considering the following:

- It is recommended to install the equipment in the cabin so as to avoid spray.
- The equipment should be located as near to the power source as possible, and as far apart as possible from any devices that may cause interference such as direction finders, navigation receivers and other onboard electronics.
- Compass safe distances (Standard compass, Steering compass) are;

	Standard	Steering
Transceiver unit	0.95 m	0.65 m
Handset and Bracket	2.05 m	1.40 m
Loudspeaker (option)	2.5 m	1.7 m

- The cabinet of the equipment, especially the rear panel, gets warm after a long transmission. Therefore, provide some space around the unit to allow for circulation of cooling air.
- The unit can be mounted on the deck or a bulkhead. The mounting location should be able to support the weight of the unit.
- If necessary, reinforce the mounting location by doubling plate.
- Fasten the unit with four tapping screws (supplied).

- For bulkhead mounting, tighten upper tapping screws (supplied) and washers so there is 5 mm clearance between bottom of screw head and bulkhead, and screw slots of the unit. Then fasten upper screws and washers.

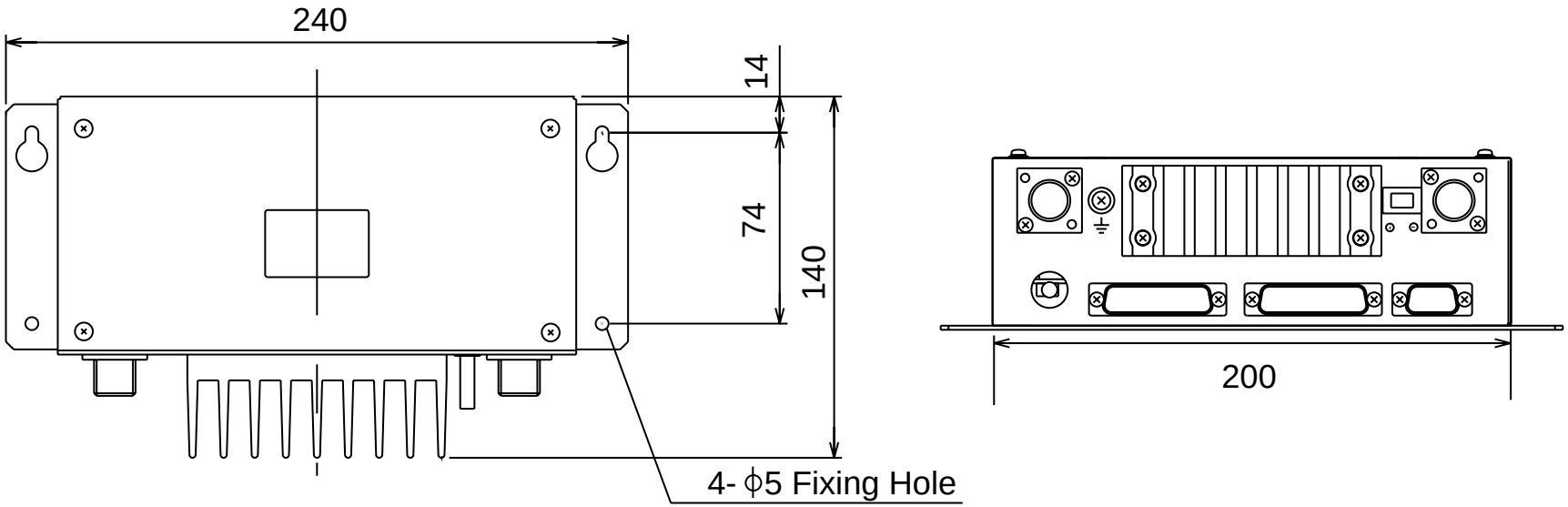

Transceiver unit, top and side view

Handset (Hanger)

The length of the hanger cable is 5 m (optional HS-2721/RB-2721B: 50 m), so locate the handset hanger within 5 m of the transceiver unit.

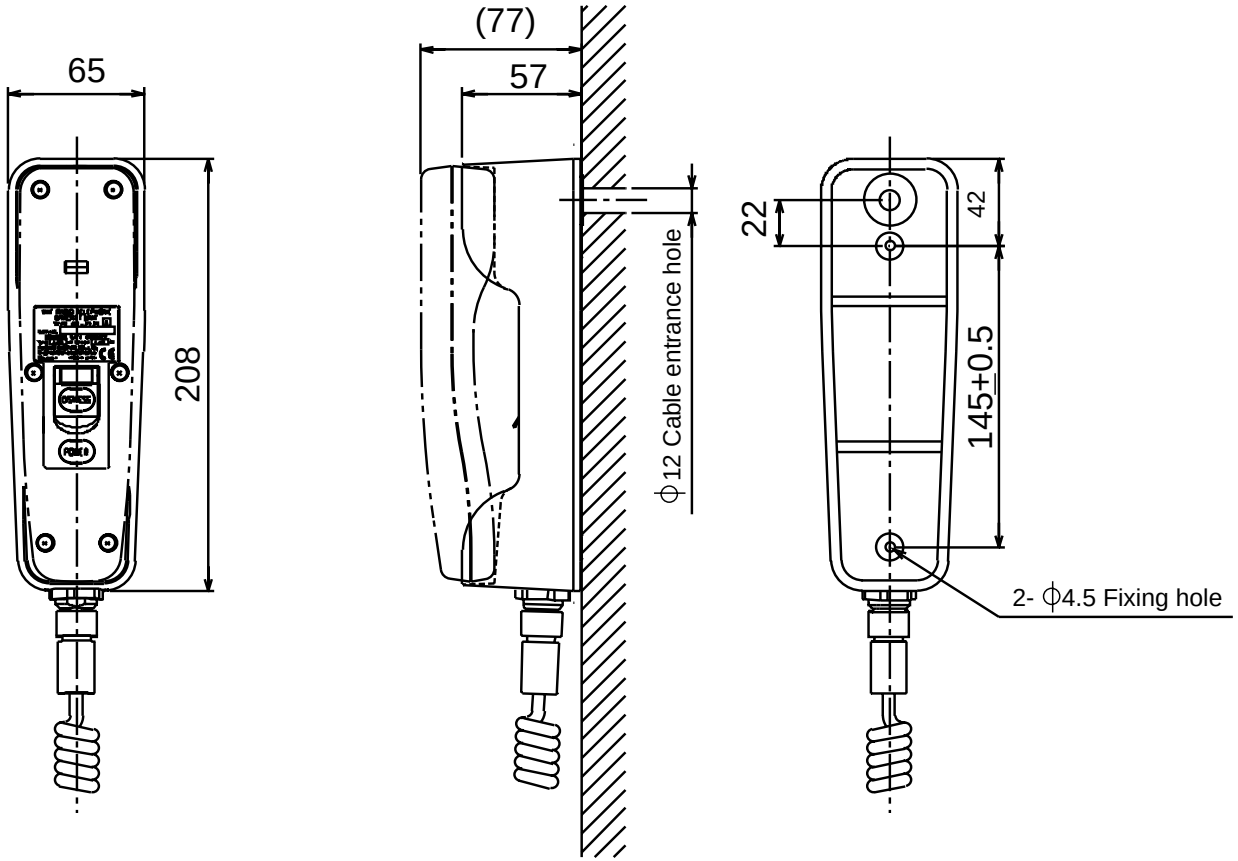

Remove six screws to remove the hanger cover, and fasten the hanger with two tapping screws (supplied) on the desktop or bulkhead.

Note: The magnet inside the hanger may pull the screwdriver when mounting the hanger.

Antenna Connection (option)

Provide a location as high and clear as possible, free from the influence of nearby antenna, rigging and masts.

However, any good quality antenna, complying with the following requirements, may be arranged locally. A high-gain antenna is preferable. If you are not sure, consult with your dealer.

Frequency range:	155 MHz to 164 MHz
Impedance:	50 ohms
Polarization:	Vertical
Input power:	25 W
Quality:	Able to withstand marine environment

Any 50 ohm coaxial cable heavier than 5D-2V or RG58C/U may be used for the connection between the antenna and the transceiver unit. Make sure to leave some slack in the cable loop behind the transceiver for service and maintenance ease.

Lay the antenna, and then solder the M-type connector onto the cable end as shown on page 7.

1.2 Transceiver Connections

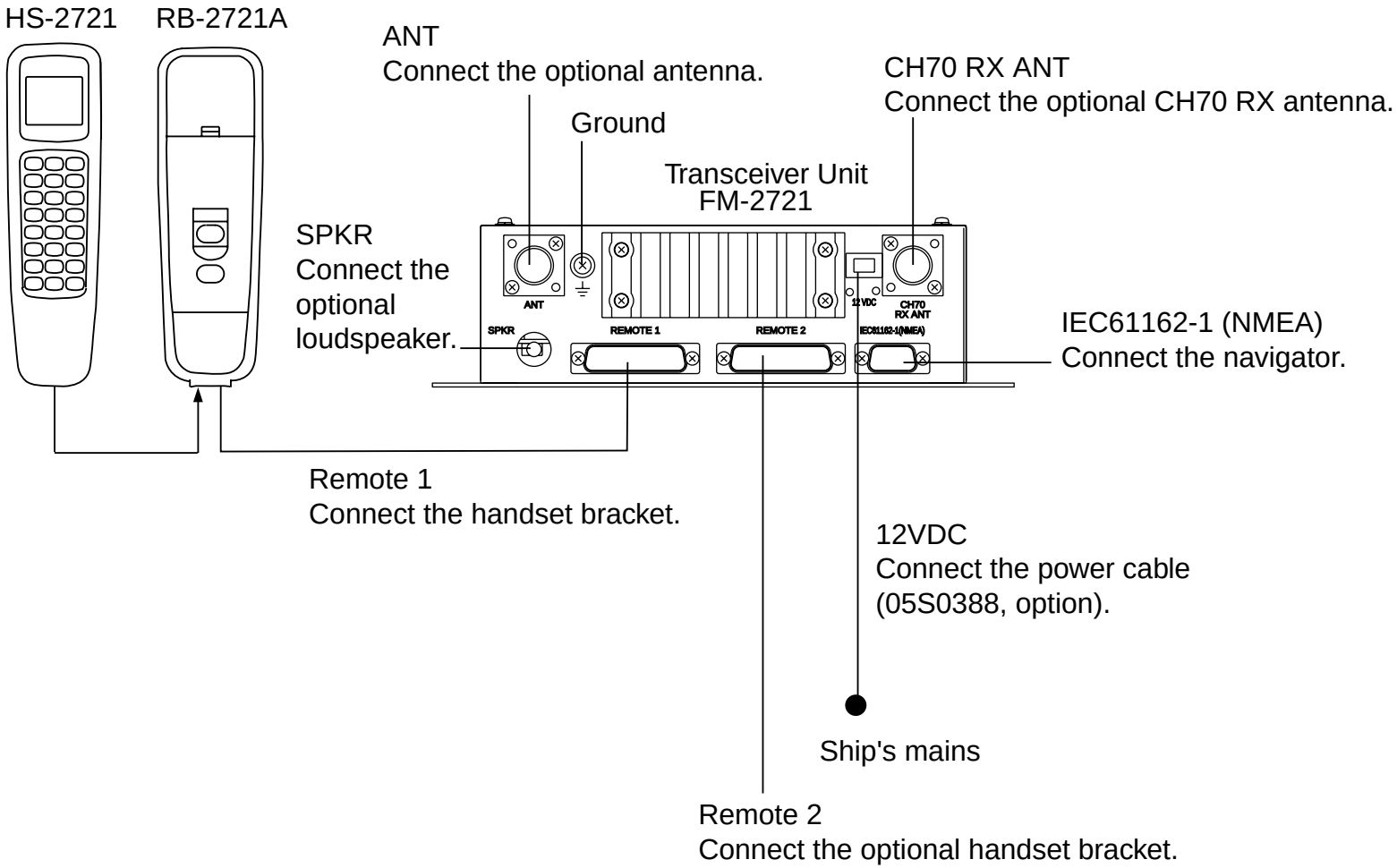

Power Connection

Connect the power cable to the connector attached at the rear of the transceiver unit. The RED wire and the BLACK wires, with inline fuses (10A), connect the transceiver unit to the ship's 12 VDC power supply.

Note: The power cable supplied is 3 meters in length; however it could be shortened as much as possible to prevent power loss.

Remote1, 2

Connect the 10P cable (supplied) here.

Ground (⏚)

While special grounding is not generally required for VHF radiotelephones, it is a good practice to properly ground all electronic equipment to the ship's ground system. The FM-2721 can be connected to ground by attaching a wire to the ground screw on the transceiver unit's rear panel and then to the nearest ship's ground connection point.

ANT

Connect the antenna cable (option) here. Use the optional antenna kit (RG-58/C/U cable).

Lay the coaxial cable and attach an M-type plug (if necessary) to the cable as right.

1. Remove the sheath by 30 mm.
2. Bare 23 mm of the center conductor. Trim braided shield by 5 mm and tin.
3. Slide coupling ring onto cable.
4. Screw the plug assembly on the cable.
5. Solder plug assembly to braided shield through solder holes. Solder contact sleeve to conductor.
6. Screw coupling ring into plug assembly.
7. Screw the plug into the ANT connector at the rear of the main unit.

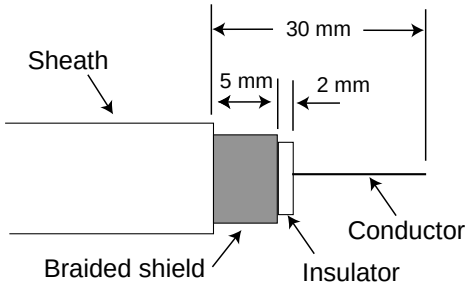

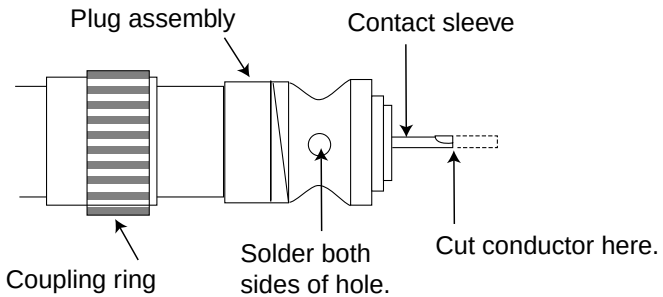

CH70 RX ANT

Connect the optional CH70 RX antenna kit. For detail, ask your dealer.

SPKR

Connect the optional loudspeaker here.

IEC61162-1 (NMEA)

Connects navigator here. The FM-2721 can input/output the following sentences in NMEA/IEC61162-1 format. Use the 17JE-23090 connector (option) and interconnection cable type EV-SA7/0.16TAx2P (local supply).

(Input):

- GLL: Latitude and longitude
- RMC: Generic navigation information
- GGA: GPA position, UTC
- ZDA: UTC, day, month, and year

(Output):

- TLL: Target data (Outputs the position data of the ship in distress to the navigation device, for example, plotter, connected.)

1.3 Handset Connection

Take appropriate measures to ensure water does not leak through hole in bulkhead made for handset cable.

10P cable between the hanger and transceiver unit

10P cable (supplied, 5 m) should be fabricated as below.

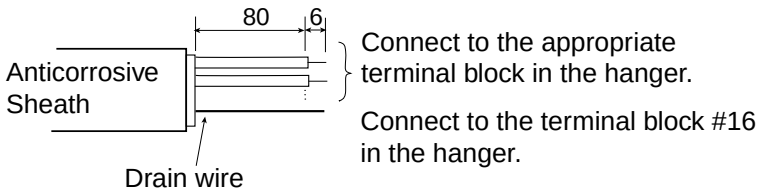

Cable Fablication

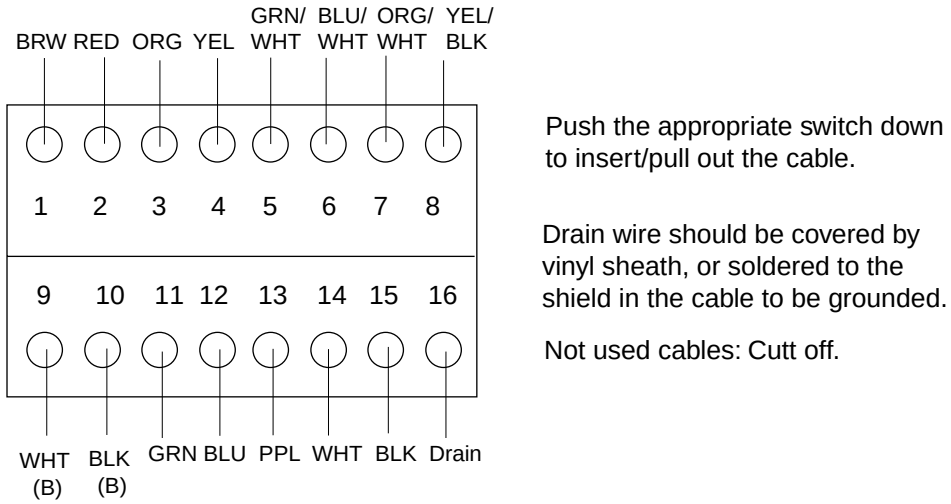

Terminal Block Arrangement

Pass the above cable through the entrance hole at the back of the hanger, and attach to the appropriate block.

Cover the hole with soft putty from the inside of the hanger.

Handset cable

Connect to the connector at the bottom of the hanger.

2. Controls

2.1 Controls, Indications, LEDs

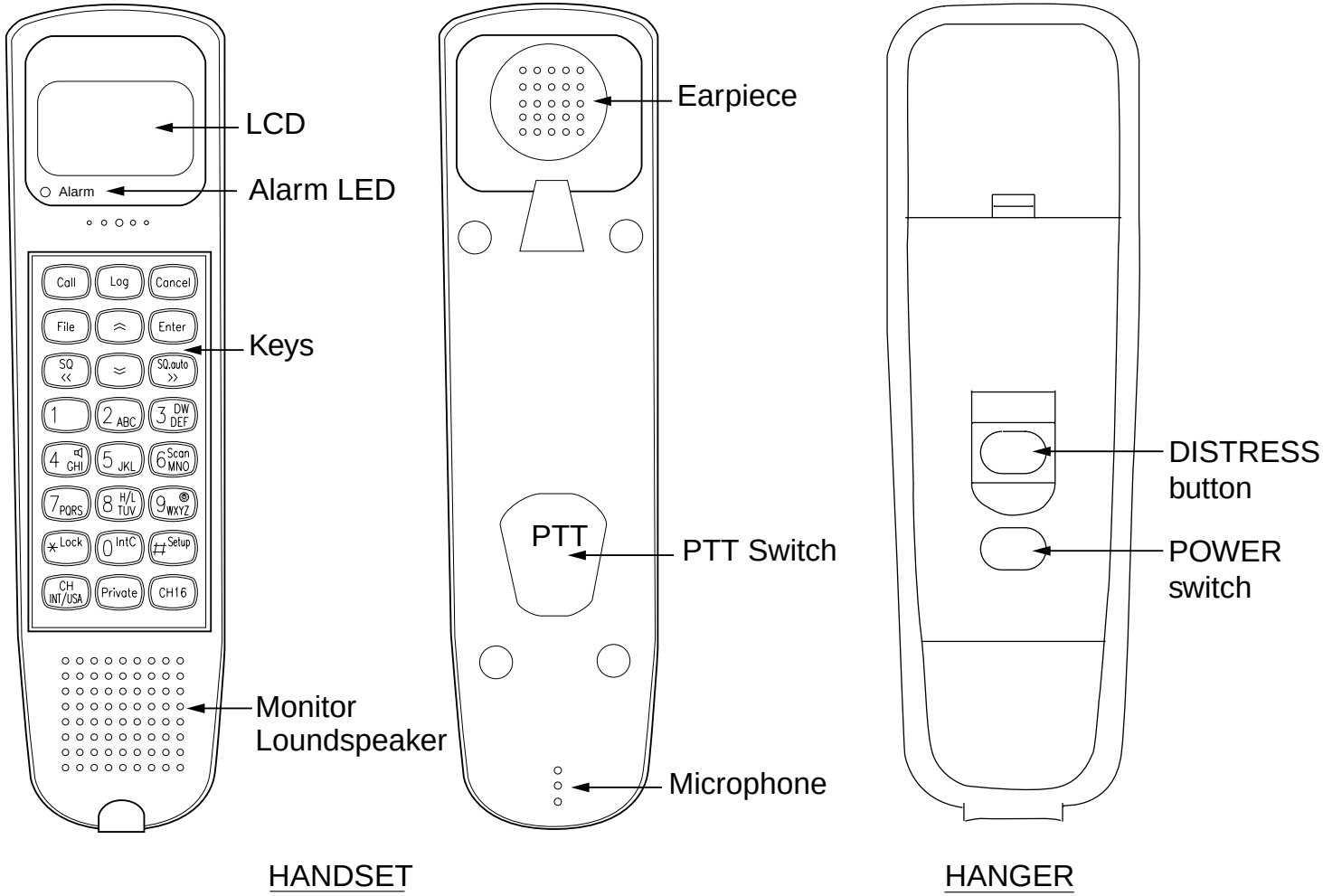

Control, LED description

POWER switch (in hanger): Turns the system on/off.

DISTRESS button (in hanger): Sends the distress alert when pressed more than three seconds.

Alarm LED: Lights when a DSC call is received. (The alarm sounds also when a DSC call is received.)

[Call] key: Sends DSC call.

[Log] key: Displays received DSC call log.

[Cancel] key: Cancels last operation and returns to previous display.

[File] key: Sends stored DSC call file.

[⋀] key: Adjusts selected item in upward direction, volume and squelch up.

[Enter] key: Terminates keyboard input.

[SQ≪] key: Adjusts squelch. Shifts cursor left ward on alphanumeric selection on screen.

[⋁] key: Adjusts selected item in downward direction, volume and squelch down.

[SQ.auto ≫] key: (Long press)Turns automatic squelch on/off; (Short press) shifts cursor right word on alphanumeric selection screen.

[🔇] key: (Long press) Turns the loudspeaker on/off

[Scan] key: Starts/stops scanning. Press this key over one second.

[H/L key]: Alternately selects transmitter output power of 1 W or 25 W. Press this key over one second.

[☼] key: Adjusts LCD contrast and panel backlighting. Press this key over one second.

[Lock] key: Locks/unlocks keyboard. Press this key over one second.

[IntC] key: Enables intercom between #1 and #2 handsets. Press this key over one second.

[Setup] key: Opens the Setup menu.

[CH /INT/USA] key: Selects international, USA or WX (wheather) channel alternately. (System setting is required.)

[Private] key: Selects private channel. (System setting is required.)

[CH16] key: Immediately selects CH16.

Monitor loudspeaker: Monitors receive signal when handset is on hook.

Earpiece: Receiver for the handset.

PTT switch: Press to talk; release to listen.

Microphone: Speak in to the microphone while pressing the PTT switch.

Indications

Off hook state

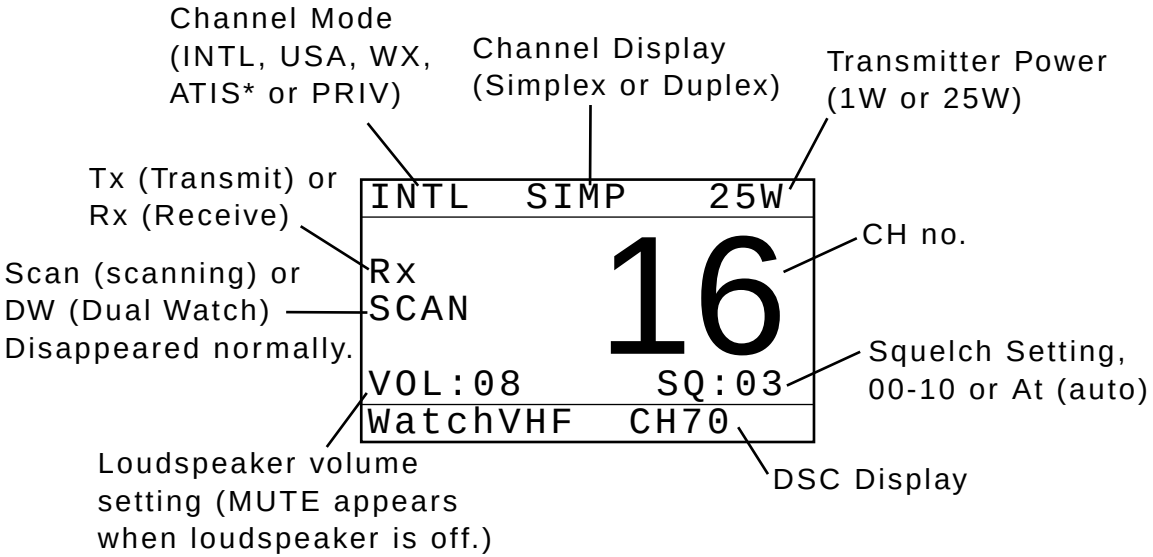

*: Only when ATIS ID is entered at the initial setting.

On hook state

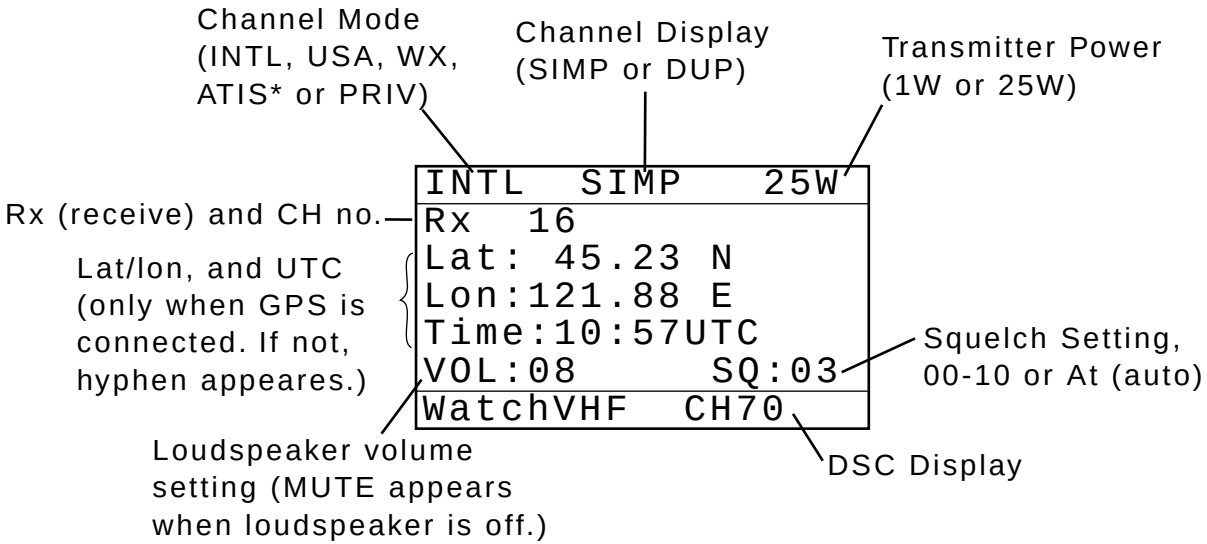

*: Only when ATIS ID is entered at the initial setting.

3. VHF Telephone Operation

3.1 Turning the Power On/Off

To turn on the FM-2721 press the [POWER] switch in the hanger. The illumination LED in the [POWER] switch lights. Press the switch again to turn off the power.

3.2 Listening for Telephony Calls

International rules require that all ships monitor channel 16 continuously.

1. Select channel 16 by press the [CH16] key. The display shows “16”.

```
INTL  SIMP   25W
Rx  16
Lat: 45.23 N
Lon:121.88 E
Time:10:57UTC
VOL:08     SQ:03
WatchVHF  CH70
```

2. Adjust loudspeaker volume by pressing [⩓] [⩔] (three sub-levels in a main level, see 3.7 Adjusting Loudspeaker Volume).
3. (Manually) Set the squelch level with the [SQ≪] key (“SQ:XX” on the LCD is displayed in reverse video) and then press [⩓] or [⩔] key. Adjust the squelch so that noise is just silenced. (Automatically) Press the [SQ.auto ≫] key over one second. "At” appears next to “SQ”.

3.3 Adjusting the Dimmer, Contrast

1. Press the [☼] key over one second to show the display for adjustment of dimmer.

```
INTL  SIMP   25W
Rx
SCAN        16
Dimmer:03
WatchVHF  CH70
```

VOL changes to Dimmer

Display in on hook condition

2. Press [⩓] or [⩔] to adjust the dimmer within five seconds.
   (00 – 03, four levels).
3. Press the [☼] key again over one second within five seconds after the dimmer setting to show the display for adjustment of contrast.
4. Press [⩓] or [⩔] key to adjust the contrast.
   Contrast indication will disappear five seconds later.

3.4 Selecting USA, INT, WX Channel

Press the [CH /INT/USA] key over three seconds to show INTL, USA, WX or ATIS (for inland waterways) at the top of the display. Mode sequence is depending on the initial setting. Please ask your dealer. (Only the international mode is available at the shipment.)

3.5 Selecting Channel

Channels can be entered three ways: pressing the [CH] [⩓] [⩔] keys, direct numeric key input, and in case of CH16 by pressing the [CH16] key.

1. Press the [CH /INT/USA] key to show INTL, USA, WX or ATIS (depending on the initial setting) at the top of the display. For private channel, press the [Private] key over three seconds to show CH 1 to 255 (when ATIS is selected channel number is prefixed with"R"), CH F, CH L, or CH P.

Using [CH], [⩓] [⩔] keys

2. Press the [CH/INT/USA] key.
3. Operate [⩓] or [⩔] until desired channel appears, or enter channel number with numeric keys. (Private channels must be selected beforehand. Please ask your dealer.)

Direct input

2. Press the numeric key to enter the channel.

Setting channel 16

2. Press the [CH16] key.

3.6 Adjusting Squelch

The squelch can be adjusted automatically or manually.

Automatic squelch adjustment

Optimal squelch level is automatically set to mute the background noise level.

Press the [SQ.auto≫] key over one second to turn automatic squelch on or off. "SQ:At" appears on the display when the automatic squelch is active.

Manual squelch adjustment

1. Press the [SQ≪] to show the display "SQ:XX (XX= current setting rate)" in reverse video.
2. Press [⩓] or [⩔] to adjust squelch. (If automatic squelch is in use the indication "At" changes to a figure.)

The squelch setting is shown next to the indication "SQ."

3.7 Adjusting Loudspeaker Volume

The loudspeaker can be adjusted by pressing [⋀] or [⋁] adjust volume. The setting range is 00-10, with three sub-levels between each main levels. Each pressing of [⋀] or [⋁] key changes the volume, however the volume indication changes only when reaching a next whole number. For example, if the current volume setting is main level 01, you would need to press the [up] key three times to reach main level 02.

Note: Only Remote 1 is available.

3.8 Muting the Loudspeaker

1. The handset automatically mutes the loudspeaker when the PTT switch is pressed, provided the speaker is active, and then reactivates the loudspeaker when the PTT switch is released.
2. To mute the loudspeaker, press the [🔇] key over one second to show “OFF” next to indication “VOL”. Repeat the procedure to activate the loudspeaker.

3.9 Setting Transmitter Power

1. You can control the transmitter power level at the handset, which can be set to either 1 W or 25 W. Low and high power are shown on the display as 1W and 25W. Note that some channels are programmed to operate at 1W only. See the list at the back of this manual.
2. To change the transmitter power, press the [H/L] key over one second to show 1W or 25W on the display.

3.10 Receiving a Telephone Call

When a call arrives your call name is heard in the loudspeaker.

1. Hook off the handset.
2. Press the PTT switch on the handset.
3. To answer the call say
   a) The name of the calling station
   b) Your station name
   c) Suggested channel number
   d) Over.
   Example: Voyager, This is FURUNO, Channel 06, Over
4. Release the PTT switch.
5. Switch to channel agreed upon and communicate. For close-range communication use 1 W transmitter power.
6. Press the PTT switch to talk: release it to listen. If you are using a simplex channel (Tx and Rx frequencies are the same) say “over” every time you have finished talking

3.11 Making a Telephone Call

1. Select channel 16 or another channel specified or agreed upon.
2. Hook off the handset.
3. Press the PTT switch and say
   a) Called station name 3 times
   b) This is [your station name] 3 times
   c) Over

   Example: Voyager, Voyager, Voyager. This is FURUNO, FURUNO, FURUNO, Over.
4. Release the PTT switch to listen.
5. When answered, confirm channel to use and switch to that channel.
6. Press the PTT switch to talk: release it to listen. Say “over” every time you have finished talking.

Note: For ATIS mode, the ATIS ID signal is transmitted when the PTT switch is released. While the ATIS ID signal is being transmitted, you cannot communicate (by pressing the PTT switch). Communicate after “Rx” appears on the display.

3.12 Dual Watch (except ATIS mode)

The dual watch mode allows you to monitor CH16 and another channel. To activate the Dual Watch set the squelch and then do the following:

1. Select a channel.
2. Press the [DW] key over one second.

“DW”, “16” and the working channel selected appear on the display and scanning begins. If a signal is present on CH16 the receiver locks on CH16 and ignores other channels. After the signal has gone, the receiver stays on CH16 until the signal goes away, and then reverts to the Dual Watch mode.

To escape from the Dual Watch mode, press any key except [Enter], [⩓] and [⩔].

3.13 Starting/Stopping Scanning (except ATIS mode)

Press the [Scan] key over one second to start the scanning.
Scanning can be stopped with the any key without [Lock] key.

3.14 Intercom

The intercom facility enables communication between two handsets on board your ship.

1. Press the [IntC] key over one second to turn the intercom on. The indication Intercom appears at the bottom of the display when the intercom facility is on.

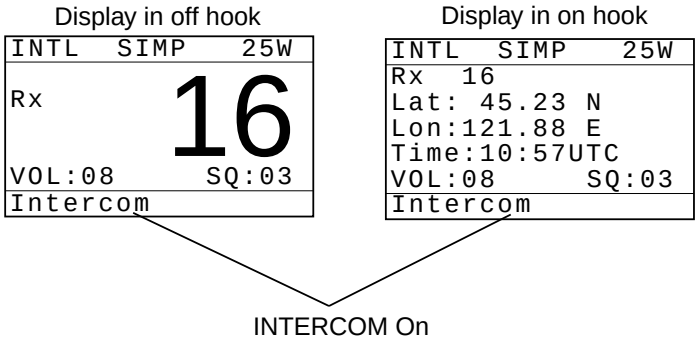

2. Hook off the handset (if it is not already off), and talk into the microphone to call other handset.
3. To turn off the intercom, hook on the handset.
   If no one answers, press the [Cancel] key to quite the intercom function.

Note: Intercom cannot be used at Remote 2 when Remote 1 is off hook, however the reverse condition is possible. (Remote 2 becomes available when Remote 1 is on hooked.)

3.15 Keyboard Lock

Some keys can be locked to avoid accidental channel changes during telephone operation. When the keyboard is locked the only functions which can be operated are [CH16] and [DISTRESS] keys.

To lock or unlock the keyboard press the [Lock] key over one second.

4. DSC Operation

This chapter shows you how to set up and send DSC calls. For each type of call the display shows the message “XXX call in progress” (XXX = name of call) while the call is being sent. If, when preparing a DSC call, no data is entered for five seconds, the equipment reverts to standby.

4.1 Distress Call

Do the following when a life endangering situation arises on your vessel:

1. Press the [POWER] switch in the hanger to turn on the unit if it is not already on.
2. Hook off the handset.
3. Open the DISTRESS button lid and press the [DISTRESS] button over four seconds. The equipment sets up as follows:
   a) Alert sounds.
   b) Distress LED flashes.
   c) Speaker is turned on.
   d) CH70 is selected.
   e) High power (25 W) is selected.

   Continue pressing the button until the display looks something like the sequence in right column.

```
    Distress
     button
   pressed!!
Nature:
 UNDESIGNATED
 KEEP PRESSED
    FOR  3SEC.
```

After 3 seconds

```
 Distress call
  in progress
Nature:
 UNDESIGNATED
 Position:12:34
12.34.E123.45N
```

(Example of transmitting display)

The equipment then sets up as follows:

   f) The display shows type of call (distress), nature of distress, your position in latitude and longitude and time.
   g) All keys are not operative.

4. After the distress call is transmitted the alert sound stops, CH70 and high power are selected. The display then shows the message “Waiting for acknowledge,” meaning your station is awaiting acknowledgement of your distress call from a coast station. The time to wait is randomly set, from 3.5 to 4.5 minutes.

Do nothing until you receive the distress acknowledge call. If the call is not acknowledged, this sequence is repeated. The distress call can be canceled by using the [Cancel] key.

```
 Wait for ack.
  Auto re-Xmit
DISTRESS CALL
Nature:
 UNDESIGNATED
Pos.    :12:34
12°34E123°45N
```

5. When you receive a distress acknowledge call from a coast station the alarm beeps.
6. Hook off the handset if it is not already off hook. Press the PTT switch and say:
   h) MAYDAY three times.
   i) This is [name of your vessel].
   j) MAYDAY
   k) This is [name of your vessel].
   l) Position
   m) Nature of DISTRESS
   n) Kind of assistance needed
   o) Number of crew
   p) Other info such as description of your vessel
   q) Over.

4.2 Distress Call by [Call] Key

This method of sending the distress call allows you to specify nature of distress.

1. Press the [Call] key to show the Call type menu.

```
   Call type
COAST CALL
SHIP CALL
PSTN CALL
GROUP CALL
ALL SHIPS CALL
DISTRESS CALL
```

2. Press [⩔] to select DISTRESS CALL and press the [Enter] key to open the Send message menu.
3. Confirm that “Nature” is selected, and then press the [Enter] key to open the Nature of dist. menu.

```
Natur of dist.
UNDESIGNATED
FIRE
FLOODING
COLLISION
GROUNDING
LISTING
```

Operate [⩓] or [⩔] to select nature of distress.

```
Natur of dist.
LISTING
SINKING
DISABLE
ABANDONING
PIRACY
MAN OVERBOARD
```

4. Scroll the display with [⩓] or [⩔] to select appropriate nature of distress among Undesignated, Fire, Flooding, Collision,
   Grounding, Listing, Sinking, Abandoning, Piracy, and Man Overboard.
5. Press the [Enter] key to send the distress call.
6. Follow from step 4 in “Distress Call by DISTRESS Button” on page 19.

4.3 Sending DSC Call to a Ship

To send a DSC call to a ship to propose a working channel, do the following:

1. Press the [Call] key to display the Call type menu.

```
   Call type
COAST CALL
SHIP CALL
PSTN CALL
GROUP CALL
ALL SHIPS CALL
DISTRESS CALL
```

2. Use [⩓] or [⩔] to choose SHIP CALL and press the [Enter] key to open the Send message menu..
3. Enter the Ship ID and press the [Enter] key. Ship ID (9 digits) may be entered manually with the numeric keys or automatically through the Addr. Sel. file. (Registration of ID required for automatic input. See “4.10 Storing IDs” on page 29.)

Manual input

Key in Ship ID with the numeric keys and press the [Enter] key.

```
  Send message
Call type:
     SHIP CALL
Ship ID:
Com channel:
                06
```

Manual entry

Automatic input

Press the [File] key. Scroll the display with [⩓] or [⩔] to select the recorded name which you desire and press the [Enter] key.

```
   Addr. sel.
01:FURUNOMARU

02:FRIEND NO.2

03:FRIEND NO.3
```

Automatic entry through Addr. sel. file

4. Press the [Enter] key to open the Com channel menu.

```
  Com channel
06  73  No INFO
08  69
10  67  MANUAL
13  77
09  15  CH Busy
72  17   ⩓   ⩔
```

NO INFO: Receiving station sets channel.
MANUAL: Enter channel with numeric key.
"CH BUSY" means the selected channel is busy now.

5. Select the communication channel with [⩓] [⩔] key.
6. Confirm that “CH Busy” disappears.
7. Press the [Enter] key.

```
12: Mess. Entry
Call type:
 SHIPS CALL
SHIP ID:
123456789
Com channel:
              06
```

8. Press the [Call] key to send the call.

After transmitting a ship’s call, FM-2721 goes to the waiting condition, and then the following message may occur.

Rcvd message able ack: You can communicate.

Rcvd message unable ack: Receiving station cannot communicate now. Other suggestion may be sent.

No response: Your call is deleted.

4.4 Sending DSC Call to a Coast Station

To send a DSC call to a coast station, do the following:

1. Press the [Call] key to open the Call type menu.

```
   Call type
COAST CALL
SHIP CALL
PSTN CALL
GROUP CALL
ALL SHIPS CALL
DISTRESS CALL
```

2. Confirm that the cursor is selecting COAST CALL.
3. Press the [Enter] key to open the Send message menu.
4. Enter the Coast ID and press the [Enter] key. Coast ID (7 digits) may be entered manually with the numeric keys or automatically through the Addr. sel. File. (Registration of ID required for automatic input. See “4.10 Storing IDs”.)

```
 Send message
Call type:
   COAST CALL
Coast ID:
   00
```

Manual entry

```
   Addr. Sel.
01:TOKYO COAST

02:KOBE COAST

03:
```

Automatic entry from Addr. sel. file

Manual input

Key in Coast ID with the numeric keys and press the [Enter] key.

Automatic input

Press the [File] key to show the “Addr. Sel.” file. Scroll the display with [⩓] or [⩔] to select the registered coast station name which you desire and press the [Enter] key.

```
 Send message
Call type:
    COAST CALL
Coast ID:
    001234567
```

5. Press the [Call] key to send the call.

4.5 Sending PSTN Call to a Shore Station

To connect to a office or home via a PSTN (Public Switched Telephone Network), do the following:

1. Press the [Call] key to open the Call type menu.

```
   Call type
COAST CALL
SHIP CALL
PSTN CALL
GROUP CALL
ALL SHIPS CALL
DISTRESS CALL
```

2. Scroll the display with [⩔] to choose PSTN CALL and press the [Enter] key to open the Send message menu.
3. Enter the Coast ID and press the [Enter] key. Coast ID (7 digits) may be entered manually with the numeric keys or automatically through the Addr. Sel. file. (Registration of ID required for automatic input. See “4.10 Storing IDs”.)

```
Send message
Call type:
    PSTN CALL
Coast ID:
    00
```

Manual entry

```
Addr. sel.
01:TOKYO COAST

02:KOBE COAST

03:
```

Automatic entry from Addr. sel. file

Manual input

Key in Coast ID with the numeric keys and press the [Enter] key.

Automatic input

Press the [File] key. Scroll the display with [⩓] or [⩔] to select the registered coast name which you desire and press the [Enter] key.

4. Confirm that Tel No: is selected..
5. Enter the Telephone No. and press the [Enter] key. Telephone number may be entered manually with the numeric keys or automatically through the Tel. No. sel. file. (Registration of telephone number required for automatic input. See “4.11 Storing Telephone Numbers.)

```
Send message
Call type:
    PSTN CALL
Coast ID:
    00
Tel No.:
```

Manual entry

```
Tel. No. sel.
01:FURUNO
   OFFICE
02:HOME

03:Dealer
```

Automatic entry through Tel. No. sel. file

Manual input

Key in telephone number with the numeric keys and press the [Enter] key.

Automatic input

Press the [File] key. Use [⩓] or [⩔] to select registered name which you desire and press the [Enter] key.

```
Send message
Call type:
    PSTN CALL
Coast ID:
    001234567
TelNo.:123456
7890123456789
```

6. Press the [Call] key to send the call.

“PSTN in progress” “Waiting for acknowledgement” appears on the screen, and then you can make telephone call via coast station.

4.6 Sending a Group DSC Call

To send a group DSC call, do the following:

1. Press the [Call] key to open the Call type menu.

```
   Call type
COAST CALL
SHIP CALL
PSTN CALL
GROUP CALL
ALL SHIPS CALL
DISTRESS CALL
```

2. Scroll the display with [⩓] and [⩔] to choose GROUP CALL and press the [Enter] key.
3. Enter the Group ID (8 digits) and press the [Enter] key. Group ID can be entered manually through the keyboard or automatically by using the Addr. Sel. file. (Registration of ID required for automatic input. See “4.10 Storing IDs.)

```
 Send message
Call type:
     GROUP CALL
Groupe ID:
    0
Com channel:
                06
```

Manual entry

```
   Addr. sel.
01:GROUP1

02:GROUP2

03:GROUP3
```

Automatic entry through Addr. sel. file

Manual input

Key in Group ID with the numeric keys and press the [Enter] key.

Automatic input

Press the [File] key. Scroll the display with [⩓] or [⩔] to select group call adress which you desire and press the [Enter] key.

4. Press the [⩔] key to open the screen for entry of Communications channel and press the [Enter] key.

```
  Com channel
06  73  No INFO
08  69
10  67  MANUAL
13  77
09  15  CH Busy
72  17   ⩓   ⩔
```

NO INFO: Receiving station sets channel.
MANUAL: Enter channel with numeric key.
"CH BUSY" means the selected channel is busy now.

5. Select communication channel with the [⩓] or [⩔] key, and press the [Enter] key.
6. Confirm that “CH Busy” disappear.

```
  Send message
Call type:
   GROUP CALL
Ship ID:
    02345678
Com channel:
              06
```

7. Press the [Call] key to send the call.
   The following display appears with designated channel. You can communicate with your group ships.

```
INTL  SIMP   25W
Rx
          06
VOL:03     SQ:At
```

4.7 Sending an All Ships Call

When an urgent but not life threatening situation arises on your ship, for example, engine trouble, send an all ships call to request assistance.

1. Press the [Call] key to open the Call type menu.

```
   Call type
COAST CALL
SHIP CALL
PSTN CALL
GROUP CALL
ALL SHIPS CALL
DISTRESS CALL
```

2. Use [⩓] and [⩔] to choose ALL SHIPS CALL and press the [Enter] key.
3. Confirm that the cursor is selecting “Priority”. If not, press [⩓] [⩔] to choose Priority. Press the [Enter] key to open the screen for selection of Priority.
4. Select URGENCY or SAFETY as appropriate and press the [Enter] key.
5. The Com channel menu appears. Press the [⩔] for entry of Communications channel.

```
  Com channel
16  71  No INFO
12  74
14  69  MANUAL
11  79
13  80  CH Busy
68       ≪  ≫
```

NO INFO: Receiving station sets channel.
MANUAL: Enter channel with numeric key.
"CH BUSY" means the selected channel is busy now.

6. Press the [Enter] key.

```
 Send message
Call type:
ALL SHIPS CALL
Priority:
          SAFETY
Com channel:
            12
```

7. Press the [Call] key to send the call.

4.8 Receiving DSC Calls

When your FM-2721 receives the DSC call, follow the steps shown below.

1. Confirm the message on the screen.
   The stand-by display is restored if the handset is not picked within two minutes of receiving a DSC call.

2. Press the [Cancel] key to silence the beep.

```
 RCVD. MESSAGE
SHIP
ROUTINE
NMSI123456789
SIMPLEX TP:12
Err. check:OK
≪ ANSWER   DEL ≫
```

Sending station ID
Designated channel

3. Select ANSWER and press the [Enter] key.
   If you don't want to communicate with other party, press the [≫] key to select "DEL" and then press the [Enter] key. However, the party is still waiting for your acknowledgment.

```
 RCVD MESSAGE
SHIP
ROUTINE
MMSI123456789
SIMPLEX TP:12
 Err. check:OK
≪ ABLE UNABLE ≫
```

4. Select ABLE and press the [Enter] key.

Note: When selecting "UNABLE", you can select channel in available and transmit individual call.

5. Press the [Call] key to send acknowledgement.
6. Start communications with designated channel.

4.9 Manual Entry of Position and Time

Position and time data are required when sending a distress alert call, either automatically by a navigation device or manually through the keyboard. If there is no navigation device or the navigation device fails enter position and time manually as follows:

1. Press the [Setup] key to display the Setup menu.

```
   Setup menu
Message entry
Adrr.entry
Tel.NO. entry
Position
Test
System
```

2. Select “Position” and press the [Enter] key.

```
    Position
INPUT:AUTO
Lat  : 12°34 N
Lon  :123°45 E
Time:12:34UTC
Now receiving
     new data.
```

(when IEC61162-1 data inputting)

3. Press the [Enter] key to display as follows.

```
   Pos. input
AUTO
MANUAL
```

4. Press the [⋁] key to select MANUAL and [Enter] key.

5. Press the [≪] key to clear digits. Each pressing crears a digit from the right.

```
    Position
Input:MANUAL
Lat  : __ __ _
Lon  :123°45
Time:12:34UTC
Unable rcv.
     new data.
```

6. Key in latitude with the numeric keys. Use [≫] to switch from North latitude to South latitude and vice versa.

7. Press the [Enter] key.
   The cursor moves to Lon.

```
    Position
Input:MANUAL
Lat  : 12°34 N
Lon  :___ __ _
Time:12:34UTC
Unable rcv.
     new data.
```

8. Key in longitude with the numeric keys same as latitude entering. Use [≫] to switch from East to West longitude and vice versa. Press the [Enter] key. The cursor moves to Time.

```
    Position
Input:MANUAL
Lat  : 12°34 N
Lon  :123°45 E
Time:   :   UTC
Unable rcv.
     new data.
```

9. Enter UTC time with the numeric keys same as latitude entering and press the [Enter] key. The display shows position and time.
10. Press the [Enter] key.

4.10 Storing IDs

You may store often-used coast, group and ship IDs, and recall them on the screen (with the [File] key) when preparing a DSC call. (Max. storage: 25 IDs)

1. Press the [Setup] key to display the Setup menu.

```
   Setup menu
Message entry
Adrr.entry
Tel.NO. entry
Position
Test
System
```

2. Select Addr. entry and press the [Enter] key.

```
   Addr.entry
01:FURUNOMARU

02:FRIEND
    SHIP
03:
```

3. Scroll the display with [⩓] or [⩔] to select empty number and press the [Enter] key. For example, select 03. The display then looks something like the one below.

```
 03:Addr.entry
03:

Station type:
            SHIP
Address:
```

4. Enter file name (max. 20 characters) with the alphanumeric keys and press the [Enter] key. For entry of alphabet or symbol.
   Every pressing of [1] key changes the symbol mark. The symbol mark sequence is as shown below.

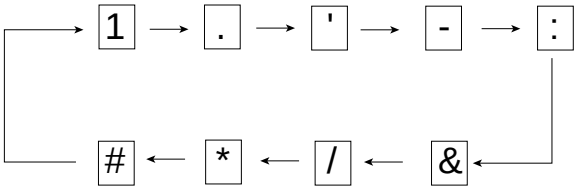

   To enter FURUNO as the name, for example, do the following.
   a) Press the [3 (DW, DEF)] key four times to enter “F”.
   b) Press the [⩥] to move the cursor to the next column.
   c) Press the [8 (TUV)] key three times to enter “U”.
   d) Repeat the above steps to complete the entering “FURUNO”.

   If you make a mistake, press the [⩤] to return to the previous column.
5. Press the [Enter] key.
6. Press the [Enter] key to open the window for selection of station type.

```
Station type

COAST
SHIP
GROUP
```

7. Select station type desired and press the [Enter] key. For example, select COAST.

```
03:Addr.entry
03:FURUNO

Station type:
          COAST
Address:
     00□
```

8. Enter ID number (Group ID, 8 digits; Coast ID, 7 digits, Ship ID, 9 digits) and press the [Enter] key.
9. Press the [Cancel] key several time to return.

4.11 Storing Telephone Numbers

Often-used telephone numbers can be stored, and display them on the screen (with the [File] key) when preparing a DSC call. (Max. storage: 25 numbers)

1. Press the [Setup] key to display the Setup menu.

```
Setup menu
Message entry
Addr.entry
Tel.NO. entry
Position
Test
System
```

2. Press [⩔] to select Tel. NO. entry and press the [Enter] key.

```
TEl. No. Entry
01:FURUNO
   OFFICE
02:HOME

03:
```

3. Press the [⩓] or [⩔] to select vacant number and press the [Enter] key.

```
Tel. No.entry
03:

Tel No.:
```

4. Enter file name (Max. 20 characters) with the alphanumeric keys and press the [Enter] key.

```
Tel. No. entry
03:FURUNO

Tel No.:
     □
```

5. Enter telephone number with the numeric keys and press the [Enter] key. (Max. 16 characters)
   For the entering of hyphen, press the [⩾].
6. Press the [Cancel] key to escape.

4.12 Storing Messages

You previously learned how to send various DSC calls. In this section you will learn how to prepare, store and send DSC file messages. (Max. storage: 25 messages)

Preparing and storing DSC messages

1. Press the [Setup] key to display the Setup menu.

```
   Setup menu
Message entry
Addr.entry
Tel.NO. entry
Position
Test
System
```

2. Select Message entry and press the [Enter] key.

```
 Message entry
01:FURUNO
   JAPAN
02:FURUNO
   SPAIN
03:FURUNO
```

3. Scroll the display with [⩓] or [⩔] to select vacant number and press the [Enter] key. For example, select 12.

```
  Mess. entry
12

Call type:
     SHIP CALL
Ship ID:
```

4. Enter the message name with alphanumeric keys ([⩽] [⩾]keys for cursor movement) and press the [Enter] key. For example, enter “ABC”.
5. Confirm that call type is selected and press the [Enter] key to open the call type menu.

```
   Call type
COAST CALL
SHIP CALL
PSTN CALL
GROUP CALL
ALL SHIPS CALL
DISTRESS CALL
```

6. Select the call type and press the [Enter] key. For example, select SHIP CALL.
7. Enter the ship ID. Ship ID (9 digits) may be entered manually with the numeric keys or automatically through the Ship ID log. (Registration of ID required for automatic input. See “4.10 Storing IDs”)

```
  Mess. entry
12:ABC
Call type:
    SHIP CALL
Ship ID:
```

Manual entry

```
  Sel. ship ID
01:FURUNOMARU

02:FRIEND
   SHIP
03:
```

Automatic entry through Sel. Ship ID

Manual input

Key in Ship ID with the numeric keys and press the [Enter] key.

Automatic input

Press the [File] key. Scroll the display with [⋀] or [⋁] to select the message name desired and press the [Enter] key.

8. Confirm that Com channel is selected, and then press the [Enter] key.

```
  Com channel
06  73  No INFO
08  69
10  67  MANUAL
13  77
09  15  CH Busy
72  17   ⋀   ⋁
```

NO INFO: No information
MANUAL: Enter channel with numeric key.
"CH BUSY" means the selected channel is busy now.

9. Select channel by pressing [⋀] or [⋁] key and press the [Enter] key.
10. Press the [Cancel] key several times to return.

Sending stored messages

Selection by cursor

1. Press the [File] key to open the file menu.
2. Select file and press the [Enter] key.
3. Press the [Call] key to send the call.

4.13 Message Log

The message log stores 50 each of the latest received routine messages (other than Distress), received distress messages, and transmitted messages, each type in its own memory. When a message log memory becomes full the oldest message in that memory is automatically erased to make room for the latest. The log file with the message of "» Not read log" has unread or unacknowledged Rx messages, unacknowledged Tx messages and unread distress messages.

The messages are saved to correspond logs as follows.

- RCVD. (Received) ORDINARY:
  All ships (Urgency, Safety), Individual (Urgency, Safety, Routine), Group (Routine)
- RCVD. (Received) DISTRESS: Distress, Distress Ack, Distress Relay
- TRANSMITTED: All above messages transmitted.

To view the message log do the following:

1. Press the [Log] key to open the Sel. Log title menu.

```
 Sel. logtitle
RCVD.ORDINARY

RCVD.DISTRESS
»Not read log
TRANSMITED
```

There are unread or unacknowledged messages.

2. Select RCVD. ORDINARY, RCVD DISTRESS or TRANSMITTTED as appropriate and press the [Enter] key.

```
 RCVD.ORDINARY
01.Ship Call
   23-12:40
02.Coast call
   23-12:34
03.Coast call
   23-12:11
```

Received ordinary log

```
 RCVD.DISTRESS
01.Acknowledge
   23-12:40
02.Distress
   23-12:34
03.Distress
   23-12:11
```

Received distress log

```
 TRANSMITTED
01.Group call
   23-12:40
02.Ship call
   23-12:34
03.Ship call
   23-12:11
```

Transmitted log

3. Select the message to view by using the [⩓] or [⩔] key or entering message number with the numeric keys. Unread messages are marked with ◖.
4. Press the [Enter] key to display the message. The example below shows a received ordinary message.

```
 RCVD MESSAGE
SHIP CALL
ROUTINE
MMSI123456789
SIMPLEX TP:16
 Err. check:OK
≪RESEND     DEL≫
```

5. **To delete the message,** press the [≫] to select DEL, and then press the [Enter] key.
6. **To resend (or answer) the message,** confirm that the cursor is selecting RESEND (or ANSWER) and then press the [Enter] key followed by the [Call] key. The message of ANSWER changes to RESEND if there is no operation within 4 minutes and 30 seconds.
7. When the ⩔ appears at the bottom of the display, it means that there are more messages. (⩓ is means the end of message.)
8. To escape from the log, press the [Cancel] key several times.

5. Maintenance

The FM-2721 is designed to provide years of trouble-free operation. It is, however, recommended to inspect and maintain the following points to minimize the possibility of equipment failure and assure optimum performance. Be sure to disconnect the power cable at the fuse holders before performing any maintenance work.

5.1 Antenna Check

Since the antenna is exposed to direct sunlight and salt water spray, it is subject to corrosion or salt water immersion at the antenna base. Physical damage, such as a crack, may occur under heavy ship's vibration. If cracks or water immersion is found, contact FURUNO dealer for servicing.

5.2 Cleaning of Transceiver, Handset

Keep the transceiver and handset clean and dry at all times. Dust or loose dirt accumulated on them should be wiped off with a soft, dry cloth. Never use plastic solvents, such as thinner or acetone for cleaning; they may dissolve paint and markings.

Check all connectors for corrosion. If corroded, clean the contact and re-tighten securely.

5.3 Fuse Replacement

A 10A fuse in the snap-in fuse holder on the power cable protects the equipment from reverse polarity and equipment fault. If the fuse has blown, first find the cause of the problem before replacing it. Use only a 10A fuse; use of other fuses will damage the equipment and void the warranty.

⚠ CAUTION

Use the proper fuse.

Use of a wrong fuse can cause fire or equipment damage and void the warranty.

5.4 Battery Check

The FM-2721 operates normally at any voltage between 10.8 and 15.6 VDC. If the battery voltage is out of ratings, check the battery liquid and the charging system of your boat. Check also rust or corrosion at the battery terminals and the ship's mains switch-board for poor contact.

6. Troubleshooting

6.1 Easy Troubleshooting

Most VHF troubles are caused not by the transceiver itself but by the ANT/feeder or power supply system. The list below provides simple troubleshooting that can be done by the operator. DO NOT ATTEMPT TO CHECK INSIDE THE EQUIPMENT. CARELESS HANDLING MAY CAUSE PERMANENT DAMAGE TO THE TRANSCEIVER.

Symptom	Possible Cause	Remedy
[POWER] switch pressed but power does not come on.	Power is off at the mains switchboard.	Turns mains switch on.
	Power lead on battery is loose or disconnected.	Secure connector firmly and check connections to battery.
	Battery is flat.	Check battery electrolyte, charging system, etc.
	Fuse has blown.	Check mains voltage and polarity and then replace the fuse (10A).

(Continued on next page)

(Continued from previous page)

Symptom	Possible Cause	Remedy
LCD looks normal but no sound.	Squelch setting too high.	Lower squelch.
	Loudspeaker volume too low.	Raise loudspeaker.
Noise but no or poor signal reception.	ANT connector (on transceiver unit) is loose or disconnected.	Fasten ANT connector tightly.
	Antenna has broken.	Replace antenna.
	Antenna cable is damaged or immersed in water.	Lay new cable (50 ohm coaxial cable).
	Radio barrier (large vessel, crane, etc.) in the signal path.	Line-of-sight is a rule of VHF communications. Wait until barrier no longer exists or you are within transmitting range of transmitter.
	Transmitter is too far away or transmitting in low power.	
TX symbol appears but no or low output power.	See items of “Noise but no or poor signal reception.”	
	Power setting is “LOW” (1 W)	Press the [H/L] key over one second to display 25 W. Some channels are programmed to operate at 1 W only. See the list at the back of this manual.

6.2 Diagnostics

A diagnostic test facility checks the equipment for proper operation.

1. Press the [Setup] key to display the Setup menu.

```
   Setup menu
Message entry
Addr.entry
Tel.NO. entry
Position
Test
System
```

2. Select Test and press the [Enter] key twice.

   The test results appear as below.

```
   Daily test
FSK Loop
  Check:    OK!
```

Results displayed as OK or NG (No Good)

3. To quit the diagnostic test, press the [Cancel] key several times.

6.3 Self check Messages

The display shows the following messages to alert to possible equipment trouble.

```
INTL  SIMP   25W
Rx
SCAN        16
VOL:08      SQ:03
   PLL unlock
```

PLL unlock

```
INTL  SIMP   25W
Rx
SCAN        16
VOL:08      SQ:03
     Remote
```

Remote Error (Handset Priority)

```
INTL  SIMP   25W
Rx
SCAN        16
VOL:08      SQ:03
   EPFS Error
```

Position Error

↓

Press the [Cancel] key,
and "Update pos.!!" replaces
"EPFS Error."
Then, enter position manually.

```
INTL  SIMP   25W
Rx
SCAN        16
VOL:08      SQ:03
   Not read log
```

Massage not yet read

6.4 Menu Tree

- [Setup] key
  - Message entry
  - Addr. entry
  - Tel. No. entry
  - Position
  - Test
  - System
    - MMSI
    - Key click
    - Auto revert (ON/OFF)
    - Program ver.
      (FM-2721:05502031XX, HS-2721:05502041XX)

Appendix

How to fabricate the cable for optional connector 17JE-23250-02/17JE-23090-02

When connecting the optional handset for REMOTE2 and/or navigational equipment to port IEC 61162-1 (NMEA), optional connector 17JE-23250-02 (for handset)/17JE-23090-02 (for NMEA) and appropriate cable are required. Fabricate them as below.

1. Remove the vinyl sheath.
2. Unravel and cut the aluminum tape at appropriate location.

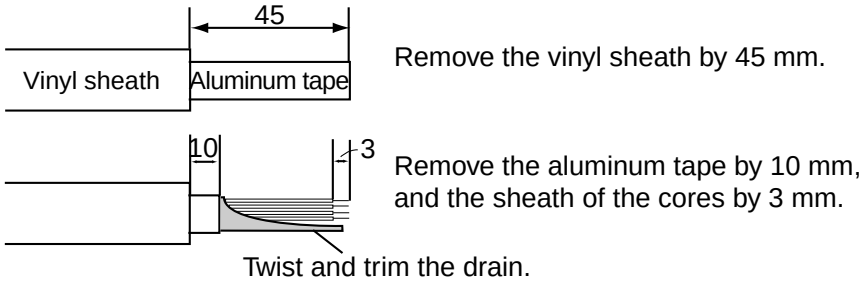

Fabrication of 05S0308 (for REMOTE2)

3. Wrap copper tape around sheath once.
4. Fold back aluminum tape onto copper tape.
5. Continue wrapping copper tape around cable.
6. Remove insulator of all cores for about 4 mm, and presolder the tip of each wire.
7. Solder the cores to the connector pins referring to the schematic diagram at back of the operator's manual.
8. Assemble the connector.
   Supplied rubber tube is not used.

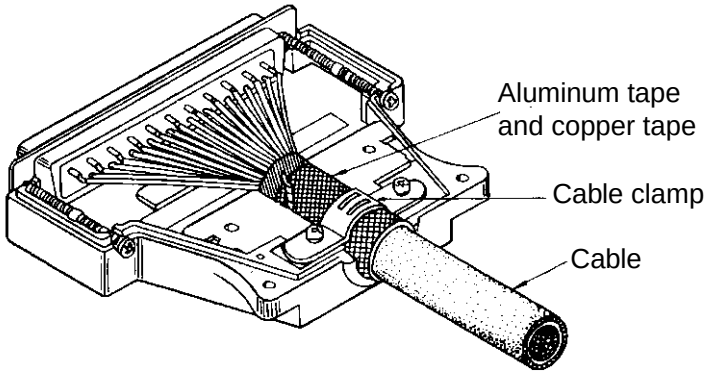

VHF Channel Frequencies (Marine and Inland waterways)

International & Inland waterways Channels:

CH	Ship Tx	Ship Rx	Remarks	CH	Ship Tx	Ship Rx	Remarks
01	156.050	160.650		15	156.750	156.750	1 W only*
02	156.100	160.700		16	156.800	156.800	
03	156.150	160.750		17	156.850	156.850	1 W only*
04	156.200	160.800		18	156.900	161.500	
05	156.250	160.850		19	156.950	161.550	
06	156.300	156.300	(Inland waterways) 1 W only	20	157.000	161.600	
07	156.350	160.950		21	157.050	161.650	
08	156.400	156.400	(Inland waterways) 1 W only	22	157.100	161.700	
09	156.450	156.450		23	157.150	161.750	
10	156.500	156.500	(Inland waterways) 1 W only	24	157.200	161.800	
11	156.550	156.550	(Inland waterways) 1 W only	25	157.250	161.850	
12	156.600	156.600	(Inland waterways) 1 W only	26	157.300	161.900	
13	156.650	156.650	(Inland waterways) 1 W only	27	157.350	161.950	
14	156.700	156.700	(Inland waterways) 1 W only	28	157.400	162.000	

*: Both International and Inland waterways

International & Inland waterways Channels (cont.):

CH	Ship Tx	Ship Rx	Remarks
60	156.025	160.625	
61	156.075	160.675	
62	156.125	160.725	
63	156.175	160.775	
64	156.225	160.825	
65	156.275	160.875	
66	156.325	160.925	
67	156.375	156.375	
68	156.425	156.425	
69	156.475	156.475	
71	156.575	156.575	(Inland waterways) 1 W only
72	156.625	156.625	(Inland waterways) 1 W only
73	156.675	156.675	

CH	Ship Tx	Ship Rx	Remarks
74	156.725	156.725	(Inland waterways) 1 W only
77	156.875	156.875	(Inland waterways) 1 W only
78	156.925	161.525	
79	156.975	161.575	
80	157.025	161.625	
81	157.075	161.675	
82	157.125	161.725	
83	157.175	161.775	
84	157.225	161.825	
85	157.275	161.875	
86	157.325	161.925	
87	157.375	157.375	
88	157.425	157.425	

USA Channels:

CH	Ship Tx	Ship Rx	Type of Operation
01	156.050	156.050	Com'l
05	156.250	156.250	Port Operations
06	156.300	156.300	Intership Safety
07	156.350	156.350	Com'l
08	156.400	156.400	Com'l
09	156.450	156.450	Call & Ship/Ship
10	156.500	156.500	Com'l & Ship/Ship
11	156.550	156.550	Com'l & Ship/Ship
12	156.600	156.600	Port Operations
13'	156.650	156.650	Nav. Ship/Bridge
14	156.700	156.700	Port Operations
15#	---	156.750	Environmental
16	156.800	156.800	Emerg/Calling
17*	156.850	156.850	State Controlled
18	156.900	156.900	Com'l
19	156.950	156.950	Com'l
20	157.000	161.600	Port Operations
21"	157.050	157.050	---
22	157.100	157.100	Coast Guard
23'	157.150	157.150	---

CH	Ship Tx	Ship Rx	Type of Operation
24	157.200	161.800	Public Corresp.
25	157.250	161.850	Public Corresp.
26	157.300	161.900	Public Corresp.
27	157.350	161.950	Public Corresp.
28	157.400	162.000	Public Corresp.
61"	156.075	156.075	---
63	156.175	156.175	Com'l
64"	156.225	156.225	---
65	156.275	156.275	Port Operations
66	156.325	156.325	Port Operations
67**	156.375	156.375	Com'l
68	156.425	156.425	Non Com'l
69	156.475	156.475	Non Com'l
71	156.575	156.575	Non Com'l
72	156.625	156.625	Non Com'l
73	156.675	156.675	Port Operations
74	156.725	156.725	Port Operations
77*	156.875	156.875	Port Operations
78	156.925	156.925	Non Com'l
79	156.975	156.975	Com'l:

USA Channels (cont):

CH	Ship Tx	Ship Rx	Type of Operation
80	157.025	157.025	Com'l
81"	157.075	167.075	---
82"	157.125	157.125	---
83"	157.175	157.175	---
84	157.225	161.825	Public Corresp.
85	157.275	161.875	Public Corresp.
86	157.325	161.925	Public Corresp.
87	157.375	161.975	Public Corresp.
88	157.425	157.425	Com'l

Transmitting is disabled.
* 1 W only
" 1 watt initially. Can be switched to high power (25 W) while [H/L] key is pressed.
' These channels are not for use by the general public in US waters.

Note: CH16 is used in all USA coastal areas to call the Coast Guard and for general vessel calling. In certain high traffic areas, CH09 is also used as the Hailing Frequency. Please check with your local Coast Guard.

VHF Weather Channel Frequencies

CH	Receive Freq.	Service
WX0	163.275	NOAA Weather
WX1	162.550	NOAA Weather
WX2	162.400	NOAA Weather
WX3	162.475	NOAA Weather
WX4	162.425	NOAA Weather
WX5	162.450	NOAA Weather
WX6	162.500	NOAA Weather
WX7	162.525	NOAA Weather
WX8	161.650	Canadian Weather
WX9	161.775	Canadian Weather

(Transmitting is disabled when WX0 - WX9 is displayed.)

CAUTION: Operation on channels not designated for use by your classification of craft or on International Channels within US territorial waters is a violation of FCC Rules and Regulations and may result in severe penalties.

PRIVATE CHANNELS (U.K. MARINERS)

	Ship Transmit	Ship Receive	Application
Coast Guard	156.000	156.000	for contact with U.K. C.G.
M1 (37P)	157.850	157.850	for pleasure boat
M2	161.425	161.425	for pleasure boat

PRIVATE CHANNELS (NORDIC)

FISHING BOATS CH	Ship Transmit	Ship Receive	Application
F1	155.625	155.625	Fishing boat F1
F2	155.775	155.775	Fishing boat F2
F3	155.825	155.825	Fishing boat F3
L1	155.500	155.500	Pleasure craft L1
L2	155.525	155.525	Pleasure craft L2
L3	155.650	155.650	Pleasure craft L3

PRIVATE CHANNELS (NETHERLANDS - INLAND)

Ship Transmit	Ship Receive	Application
157.550	162.150	Yacht harbor (CH31)

General Notes on Operating Marine VHF

Rules and Manners

The FM-2721 fully complies with the requirements for international maritime VHF radio service. It is intended to be used by a person who holds a valid radio operator’s license and station call sign.Below are some important rules, regulations and manners for operating the equipment.

- Whenever the radio is turned on, keep watch on CH16 for distress or calling message.
- Distress communications have absolute priority. If you hear MAYDAY, talk only if you can help, and be prepared to offer assistance or relay the distress message.
- Use appropriate channels.
- Listen before transmitting to avoid interfering with other communications.
- The ship Radiotelephone Station Licensee is responsible for recording in a communication log all contacts made over the telephone and watch period on CH16. All distress, emergency and safety messages must be recorded in detail. Entries must show boat’s name, call sign, watch start/stop times, and operator’s signature. Use 24-hour notation to record time.
- Radio waves are public property. Keep all communications as brief and clear as possible.
- Declare ID or call sign at the beginning and end of each communication.
- Do not divulge contents of communications nor use them for private benefit without permission. (This does not apply to distress communication.)
- Be aware that many people are listening. Do not use indecent or profane language.

Communication Distance

The FM-2721 operates on the VHF band assigned for maritime mobile stations.

The VHF radio wave, unlike LF or HF, propagates like a light ray. Thus communication is only available with another VHF antenna which is above the horizon. This is called line-of-sight.

Even if a clear line-of-sight condition exists, the radio wave is attenuated along the signal path. The communication distance is limited also by transmitter power, antenna efficiency and receiver sensitivity.

The average communication range, using 25 W marine VHF, is **10 to 15 nm for ship-to-ship and 20 to 30 nm for ship-to-shore.**

Note that an obstruction in the signal path, such as a large ship, crane, building or mountain, can destroy VHF communications even for a short distance.

SPECIFICATIONS OF MARINE VHF RADIOTELEPHONE FM-2721

1. GENERAL

Number of Channels	INLAND WATERWAYS (ATIS):	55
	INTL:	55
	USA:	55
	Weather:	10
	Private:	20
Communication System	Semi-duplex & Simplex	
Class of Emission	G3E (Voice), G2B (DSC)	

2. TRANSMITTER

Frequency Range:	155.000 to 161.475MHz
Output Power:	25W max., 1W at power reduction
Frequency Deviation:	±5 kHz max.
Antenna Impedance:	50 ohms
AF Response:	6 dB/oct. +1dB/-3dB, Pre-emphasis
Spurious Emission:	St-by: less than 2 nW
	Transmit: less than 0.25 μW

3. RECEIVER

Frequency Range:	155.000 to 166.075MHz
Intermediate Frequency:	1st. 45.1 MHz, 2nd. 455 kHz
Antenna Impedance:	50 ohms
Sensitivity:	Less than +6dBμV (20dB SINAD)
Adjacent Channel Selectivity:	70dB or more
Spurious Response:	70dB or more
Audio Output:	Handset speaker: 0.5 W into 8 ohms
	Ear-speaker: 1.5 mW into 150 ohms

4. DSC SECTION

Protocol:	Complies with ITU-R Rec. 493-9[5], 541-8(Class D) and 689-2
Modulation Rate:	600 Hz ±30 p.p.m. max. (1200 baud equivalent)
Modulation:	AFSK
Modulation Frequency:	Mark: 1300Hz ±10Hz max.
	Space: 2100Hz ±10Hz max.
Modulation Index:	2.0 ±10%
Dynamic Range	SER 10^{-2} or less
Navigation Data	IEC61162-1 (NMEA)

5. ATIS SECTION

Modulation Rate:	600 Hz ±30 p.p.m. max. (1200 baud equivalent)
Modulation:	AFSK
Modulation Frequency:	Mark: 1300Hz ±10Hz max.
	Space: 2100Hz ±10Hz max.
Modulation Index:	1.0 ±10%

6. CH70 WATCH RECEIVER

Receiving Frequency	156.525 MHz
Sensitivity (Input level SER=10^{-2}):	less than 0 dBμV
Conducted Spurious Emission:	Less than 2 nW

7. POWER SUPPLY

Main Unit	12 VDC (-10%, +30%): 2 A,
	Max. 6 A at 25W transmit

8. ENVIRONMENTAL CONDITION

Ambient Temperature	-15°C to +55°C
Relative Humidity	93%±3% at 40°C
Vibration (IEC60945)	±1 mm ±10%, 2(5) to 13.2 Hz, Maximum acceleration 10 m/s^2, 12.5/50 Hz
Water proofing	Transceiver Unit: IPX0
	Handset & Hanger: IPX5

9. COATING COLOR

Transceiver Unit	N3.0
Handset & Hanger	N3.0

PACKING LIST

FM-2721

NAME	OUTLINE	DESCRIPTION/CODE No.	Q'TY
ユニット UNIT			
送受信機 TRANSCEIVER UNIT	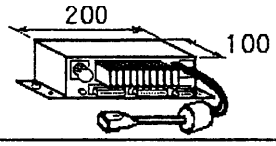	FM-2721 000-057-745	1
ﾊﾝﾄﾞｾｯﾄ HANDSET	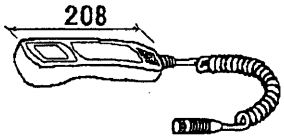	HS-2721 000-057-736	1
ﾊﾝﾄﾞｾｯﾄﾊﾝｶﾞｰ BRACKET FOR HANDSET	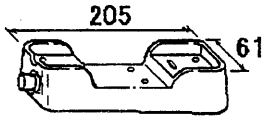	RB-2721A 000-057-735	1
予備品 SPARE PARTS			
ﾋｭｰｽﾞ FUSE	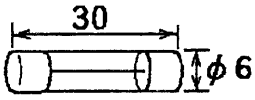	FGBO 10A AC125V 000-549-065	2
工事材料 INSTALLATION MATERIALS			
ｹｰﾌﾞﾙ組品 CABLE ASSY.	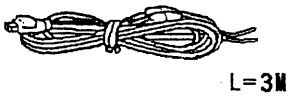	05S0388 000-111-061	1
ｹｰﾌﾞﾙ組品 CABLE ASSY.	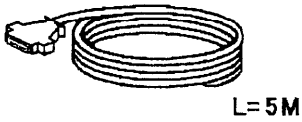	05S9270 000-143-080	1
+ﾄﾗｽﾀｯﾋﾟﾝｸﾞﾈｼﾞ TAPPING SCREW	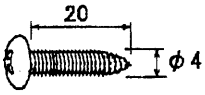	M4X20 SUS304 000-805-687	4
ﾎﾟﾘｶﾜｯｼｬｰ WASHER		M4X20 SUS304 000-864-937	4
+ﾄﾗｽﾀｯﾋﾟﾝｸﾞﾈｼﾞ TAPPING SCREW	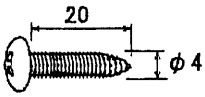	M4X20 SUS304 000-805-687	2
ﾎﾟﾘｶﾜｯｼｬｰ WASHER		M4X20 SUS304 000-864-937	2

DWG NO.
C5616-Z01- A

(略図の寸法は、参考値です。 DIMENSIONS IN DRAWING FOR REFERENCE ONLY.)

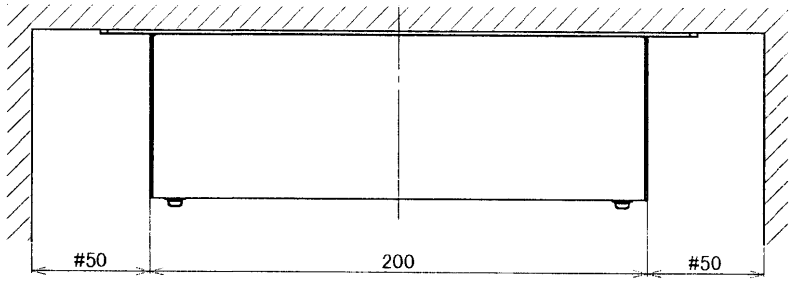

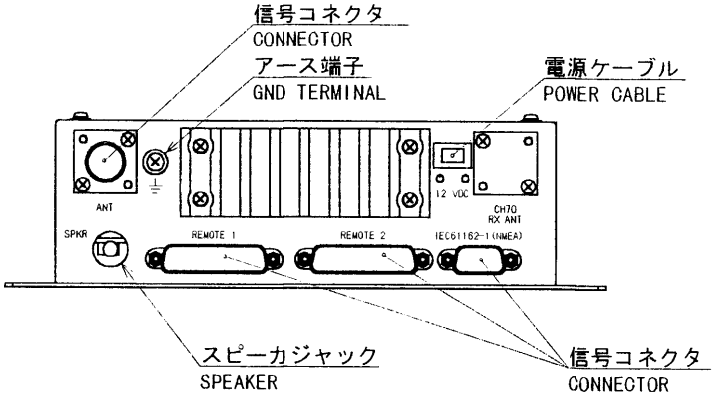

矢視 A
VIEW A

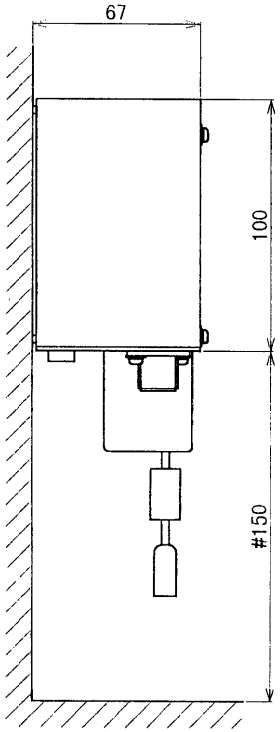

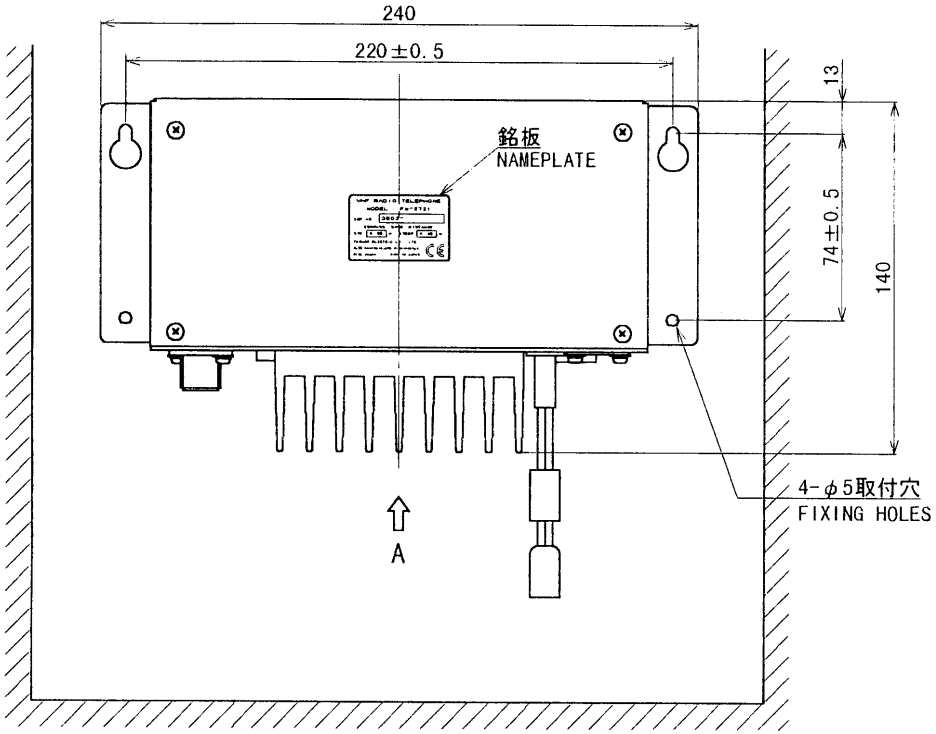

寸法区分(mm) DIMENSION	公差(mm) TOLERANCE
0 ＜ L ≦ 50	±1.5
50 ＜ L ≦ 100	±2.5
100 ＜ L ≦ 500	±3

表1
TABLE 1

注記 1）指定なき寸法公差は表1による。
2）取付用ネジはタッピンネジ4×20を使用のこと。
3）#：推奨する最小サービス空間寸法。

NOTE 1. TABLE 1 INDICATES TOLERANCE OF DIMENSIONS.
2. USE TAPPING SCREWS 4x20 FOR FIXING UNIT.
3. #: RECOMMENDED SERVICE CLEARANCE.

DRAWN Mar 7'00 T.YAMASAKI		TITLE	FM-2721
CHECKED Mar 7'00 Y.EBISU		名称	送受信機
APPROVED Mar. 7'00 S. Yoshimura			外寸図
SCALE / MASS 1.8 kg ±10%	MASS W/ POWER CABLE 質量は電源ケーブルを含む。	NAME	TRANSCEIVER UNIT
DWG. No. C5616-G06- B	05-086-3000-G4		OUTLINE DRAWING

FURUNO

表1 TABLE 1

寸法区分(mm) DIMENSION	公差(mm) TOLERANCE
0 ＜ L ≦ 50	±1.5
50 ＜ L ≦ 100	±2.5
100 ＜ L ≦ 500	±3

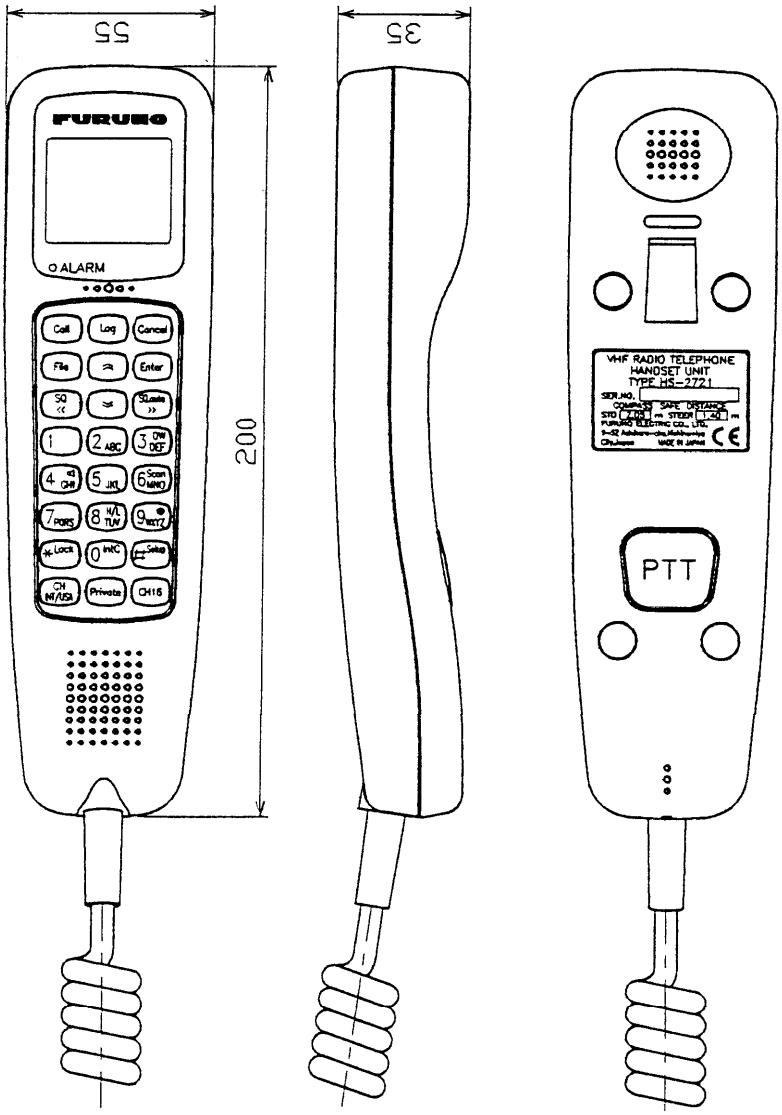

注記
1）指定なき寸法公差は表1による。

NOTE
1. TABLE 1 INDICATES TOLERANCE OF DIMENSIONS.

DRAWN Feb. 18'00 Y. EBISU			TITLE HS-2721
CHECKED Feb. 18'00 T. Takeuchi			名称 ハンドセット
APPROVED Feb. 18, 00 S. Yoshiwara		FM-2721	外寸図
SCALE	MASS ±10% 0.32 kg		NAME HANDSET
DWG. No. C5616-G03- A		05-086-1000-G4	OUTLINE DRAWING

FURUNO ELECTRIC CO., LTD.

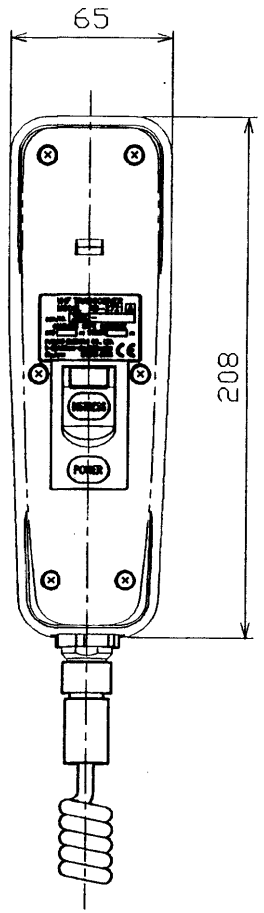

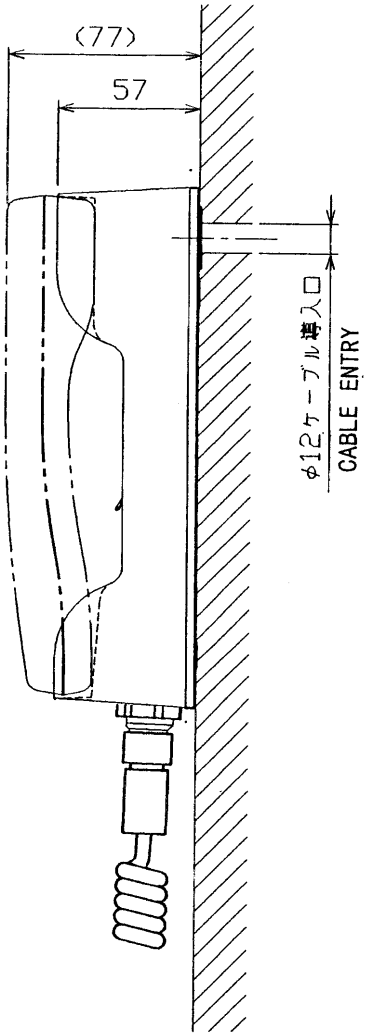

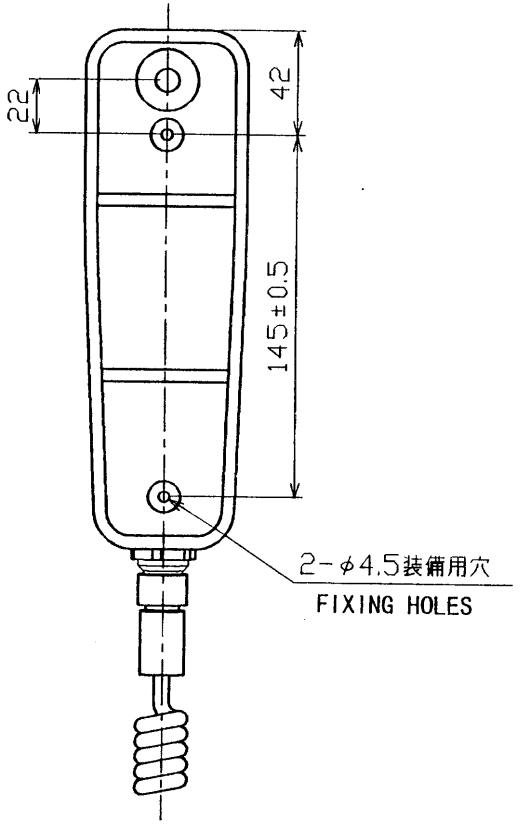

寸法区分(mm) DIMENSION	公差(mm) TOLERANCE
0 ＜ L ≦ 50	±1.5
50 ＜ L ≦ 100	±2.5
100 ＜ L ≦ 500	±3

表1
TABLE 1

注記
1）指定なき寸法公差は表1による。
2）取付用ネジはタッピンネジ4×10以上を使用のこと。

NOTE
1. TABLE 1 INDICATES TOLERANCE OF DIMENSIONS.
2. USE TAPPING SCREWS 4x10 FOR FIXING UNIT.

DRAWN Feb. 18. '00 Y. EBISU		TITLE	RB-2721A
CHECKED Feb. 18 '00 T. Takeno		名称	ハンドセットハンガー
APPROVED Feb 18 '00 S. Yoshimura			外寸図
SCALE / MASS 0.8 kg ±10%		NAME	BRACKET FOR HANDSET
DWG. No. C5616-G04- A	05-086-2000-G2		OUTLINE DRAWING

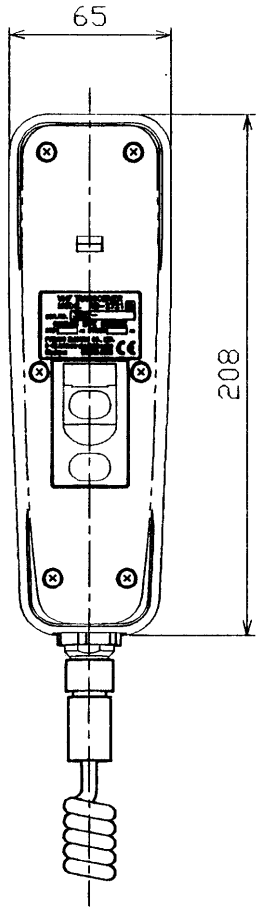

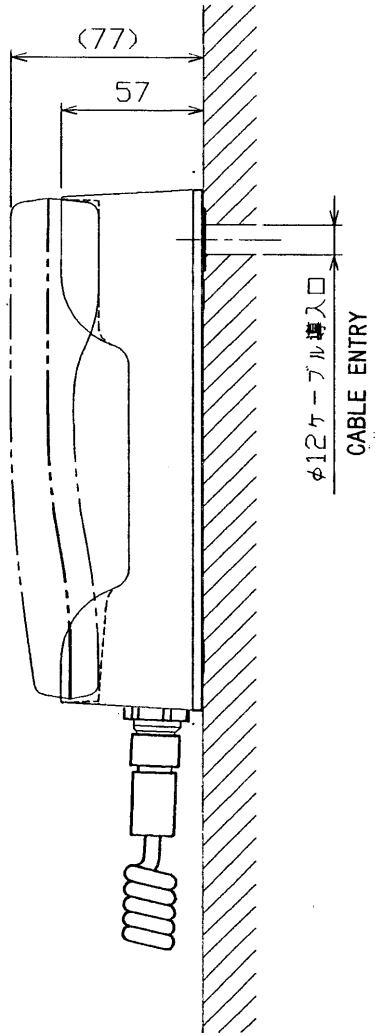

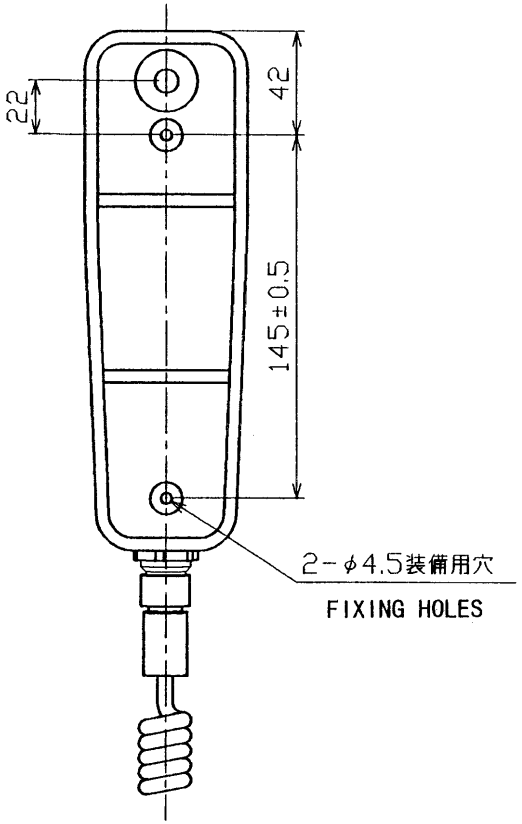

寸法区分(mm) DIMENSION	公差(mm) TOLERANCE
0 ＜ L ≦ 50	±1.5
50 ＜ L ≦ 100	±2.5
100 ＜ L ≦ 500	±3

表1
TABLE 1

注記
1）指定なき寸法公差は表1による。
2）取付用ネジはタッピンネジ4×10以上を使用のこと。

NOTE
1. TABLE 1 INDICATES TOLERANCE OF DIMENSIONS.
2. USE TAPPING SCREWS 4x10 FOR FIXING UNIT.

DRAWN Feb.18'00 Y. EBISU			TITLE RB-2721B
CHECKED Feb.18'00 I. Takeuchi			名称 ハンドセットハンガー
APPROVED Feb.18'00 S. Yoshimura			外寸図
SCALE	MASS ±10% 0.7 kg		NAME BRACKET FOR HANDSET
DWG. No. C5616-G05- A		05-086-2100-G2	OUTLINE DRAWING

FURUNO

S－1

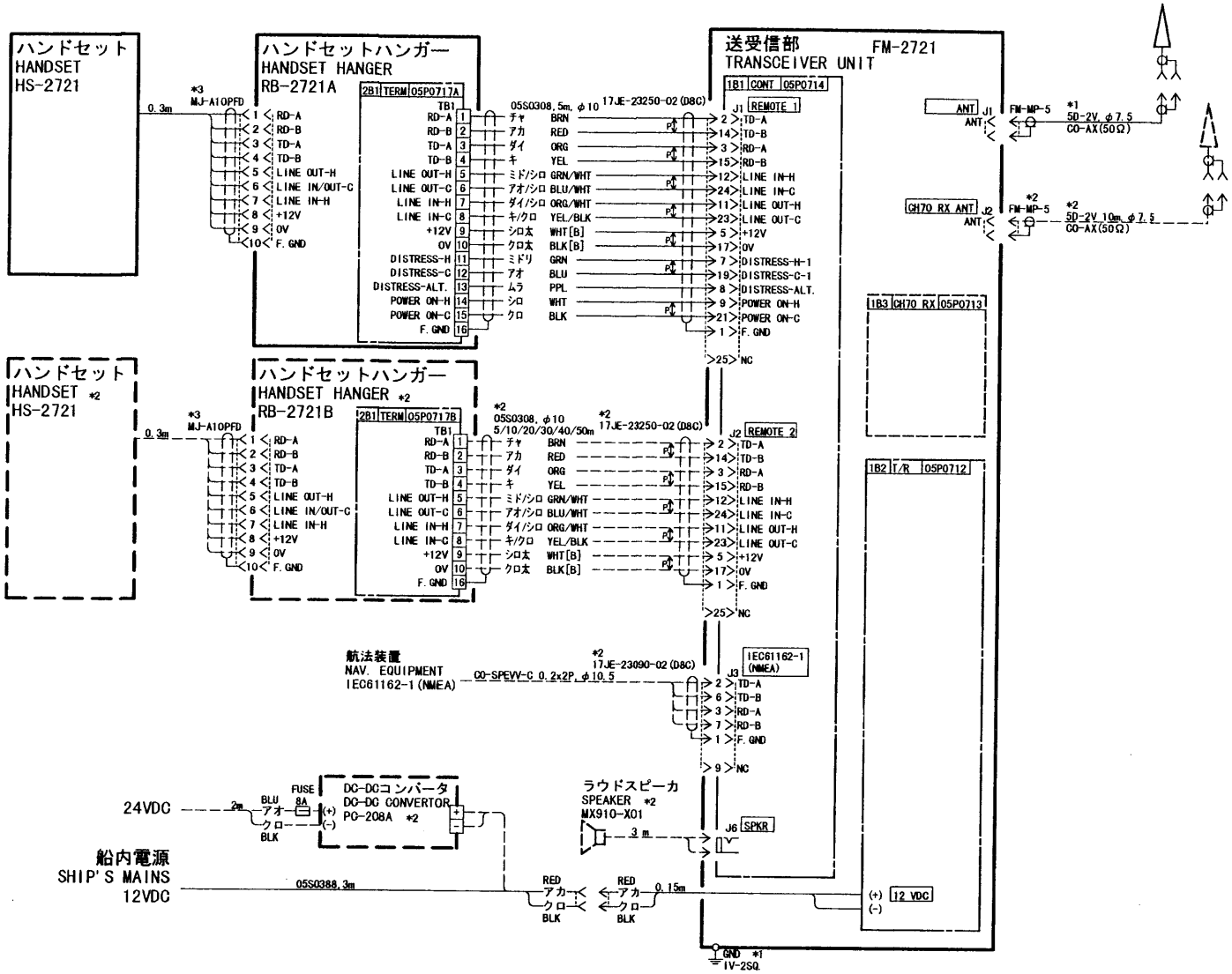

注記
＊1）造船所手配。
＊2）オプション。
＊3）工場で取付済み。

NOTE
*1. SHIPYARD SUPPLY.
*2. OPTION.
*3. FITTED AT FACTORY.

DRAWN June 28'00 T.YAMASAKI	TITLE	FM-2721
CHECKED June 28 '00 T.Kim	名称	国際VHF無線電話装置
APPROVED June 28 '00 T.Kim		相互結線図
SCALE / MASS kg	NAME	INTERNATIONAL VHF RADIOTELEPHONE
DWG No. C5616-C01- D		INTERCONNECTION DIAGRAM

FURUNO ELECTRIC CO., LTD.

FURUNO ELECTRIC CO., LTD.
9-52 Ashihara-Cho, Nishinomiya City, 662-8580, Hyogo, Japan
Tel: +81 798-65-2111 Fax: +81 798-65-4200

Pub NO. DOC-276

Declaration of Conformity CE 0560

We FURUNO ELECTRIC CO., LTD.

(Manufacturer)

9-52 Ashihara-Cho, Nishinomiya City, 662-8580, Hyogo, Japan

(Address)

declare under our sole responsibility that the product

VHF radiotelephone with Class "D" DSC Model FM-2721
(Serial No. 3502-0011)

(Model name, serial number)

is in conformity with the essential requirements as described in the Directive 1999/5/EC of the European Parliament and of the Council on radio equipment and telecommunications terminal equipment (R&TTE Directive) and satisfies all the technical regulations applicable to the product within this Directive

EN 60945: 1997-01 (IEC 945 Third edition: 1996-11)
EN 301 025 V1.1.1: 1998-08

(title and/or number and date of issue of the standard(s) or other normative document(s))

For assessment, see

- Statement of Opinion N° 00214032/AA/00 of 29 June 2000 issued by KTL Certification, The Netherlands
- Test report 98540730 of 15 March 2000 prepared by KTL, The Netherlands
- Test report FLI 12-00-002 of 18 February, 2000 prepared by Furuno Labotech International Co., Ltd.

On behalf of Furuno Electric Co., Ltd.

Hiroaki Komatsu
Manager,
International Rules and Regulations

Nishinomiya City, Japan
July 14, 2000

(Place and date of issue)

(name and signature or equivalent marking of authorized person)